SIMPLE, NO-FUSS FINISH

Easy, Durable, and Renewable

Woodsmith®

www.woodsmith.com

Vol. 29 / No. 173

Complete Plans for Building the Woodsmith Shop WORKBENCH

ROUTER SECRETS FOR FOOLPROOF PROFILES

Table Saw Technique: Top Tips for Cutting Perfect Tenons

ALSO Cut Down Your Sanding Time — We'll Show You How

A Publication of August Home Publishing

Table of Contents

from our readers
Tips & Techniques 4

all about
Shop Brooms & Brushes 8
Learn what you need to look for when choosing a broom or brush for your shop.

tools of the trade
Sanders in the Shop 10
Every woodworking shop needs a power sander or two. Here's how to get the most out of yours.

jigs and fixtures
Design & Inlay Kit 14
This easy-to-use router jig makes adding decorative designs to your projects a snap.

tips from our shop
Shop Notebook 32

techniques from our shop
Tenons on the Table Saw 38
We'll show you two foolproof techniques for cutting perfect-fitting tenons on the table saw.

working with tools
Edge Routing Secrets 42
Edge routing a workpiece is an everyday task, but a few simple tips can give you better results.

small shop solutions
Saw & Blade Storage 44
Take a look at some great ideas for keeping your saw blades and hand saws organized.

finishing room
Choosing a Workbench Finish 46
It makes good sense to protect this important shop fixture with the right finish.

details of craftsmanship
Haunched Mortise & Tenon 48
Here's the scoop on why this joint is the best choice for solid-wood frame-and-panel doors.

in the mailbox
Q & A 50

hardware and supplies
Sources 51

Candle Centerpiece page 16

Traditional Workbench page 20

projects

designer series project

Candle Centerpiece 16

A few small pieces of wood and a couple hours of time are all you need to invest in this project. But it's the simple construction and attention to the details that make it a winner.

shop project

Traditional Workbench 20

A solid workbench is at the heart of every shop. This one gives you everything you could ever want or ask for — solid hardwood construction, two versatile vises, and plenty of workspace.

DESIGNER'S NOTEBOOK

weekend project

Fretwork Wall Shelf. 34

The distinctive scroll saw work on this small shelf gives it the look of a timeless antique. But using basic joinery techniques, you can build this classic project in a short weekend.

Fretwork Wall Shelf page 34

editor's note

Sawdust

Summer always seems to go by so quickly. But this year, it's gone even faster. That's because there's been a lot going on around here in the past few months.

For starters, we've been working on a couple of new, 100-page books that I'd like to tell you about. In *Tools & Jigs*, we've collected some of our favorite upgrades and add-ons to make the tools in your shop work harder. Plus, we've included several shop-built machines that will save you time and money.

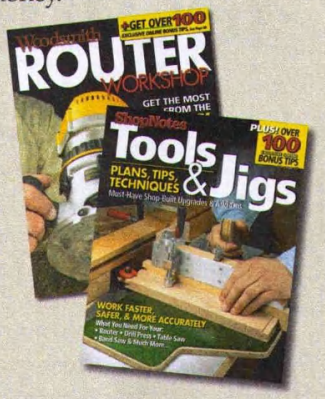

The second book is *Router Workshop*. And if you've been a *Woodsmith* reader for a while, you know I'm a big fan of the router. Well, in this book, you'll find everything from quick and easy jigs you can build, to practical tips and top-notch techniques.

Besides all the practical information in the books, you'll also receive exclusive, online access to over 100 tips as an added bonus. Just go to www.Woodsmith.com to find out more.

Of course, we were also hard at work designing and building the projects for this issue. After a busy summer, I was looking forward to a couple of simple projects that didn't take much time to make. And the Candle Centerpiece (page 16) and Fretwork Wall Shelf (page 34) are just right for easing back into the shop.

The Traditional Workbench on page 20 is another story altogether. While it's a big project packed with all the right features, you'll find it's really straightforward to build. It was designed to be the heart of something else that we've been working on this summer — the new *Woodsmith Shop*. (Hint: It has to do with television cameras.) That's all I can say for now — so stay tuned.

Terry

ONLINE EXTRA
video workshop

Woodsmith GO ONLINE EXTRAS

These two symbols let you know there's more information online at www.Woodsmith.com. There you'll see step-by-step videos, technique and project animation, bonus cutting diagrams, and a lot more.

Tips & Techniques

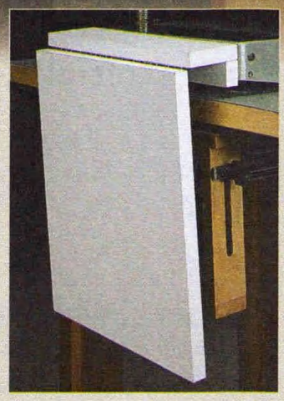

▲ Extension tables fold away when not in use.

Fold-Away Extension Tables

I wanted to extend the short tables on my thickness planer, but I don't have room in my small shop for a large, permanent setup. My space-saving solution is shown above.

Here's how the tables work. Whenever I need them, I lift the hinged table and pull out a support frame that slides on a set of metal full-extension drawer slides. Next, I level the table and frame and hold it in place while tightening a pair of star knobs.

The drawing below shows how the tables are assembled. There are a couple of things that I should point out.

First, the tables are built out of ¾" melamine, which provides a smooth surface for the workpieces to slide along easily.

Second, the tables are bolted to the planer level with the bed, but aren't attached to the frames. And, third, the assembly is attached to a frame that mounts to the underside of the planer stand.

Now, I have plenty of support while stock is being planed. And when the planer is not in use, I just slide the frames back and the tables can be lowered out of the way.

Gordon Gaines
Oakdale, California

Woodsmith GO ON-LINE EXTRAS

To find detailed plans for building the fold-away planer table, visit our website at Woodsmith.com

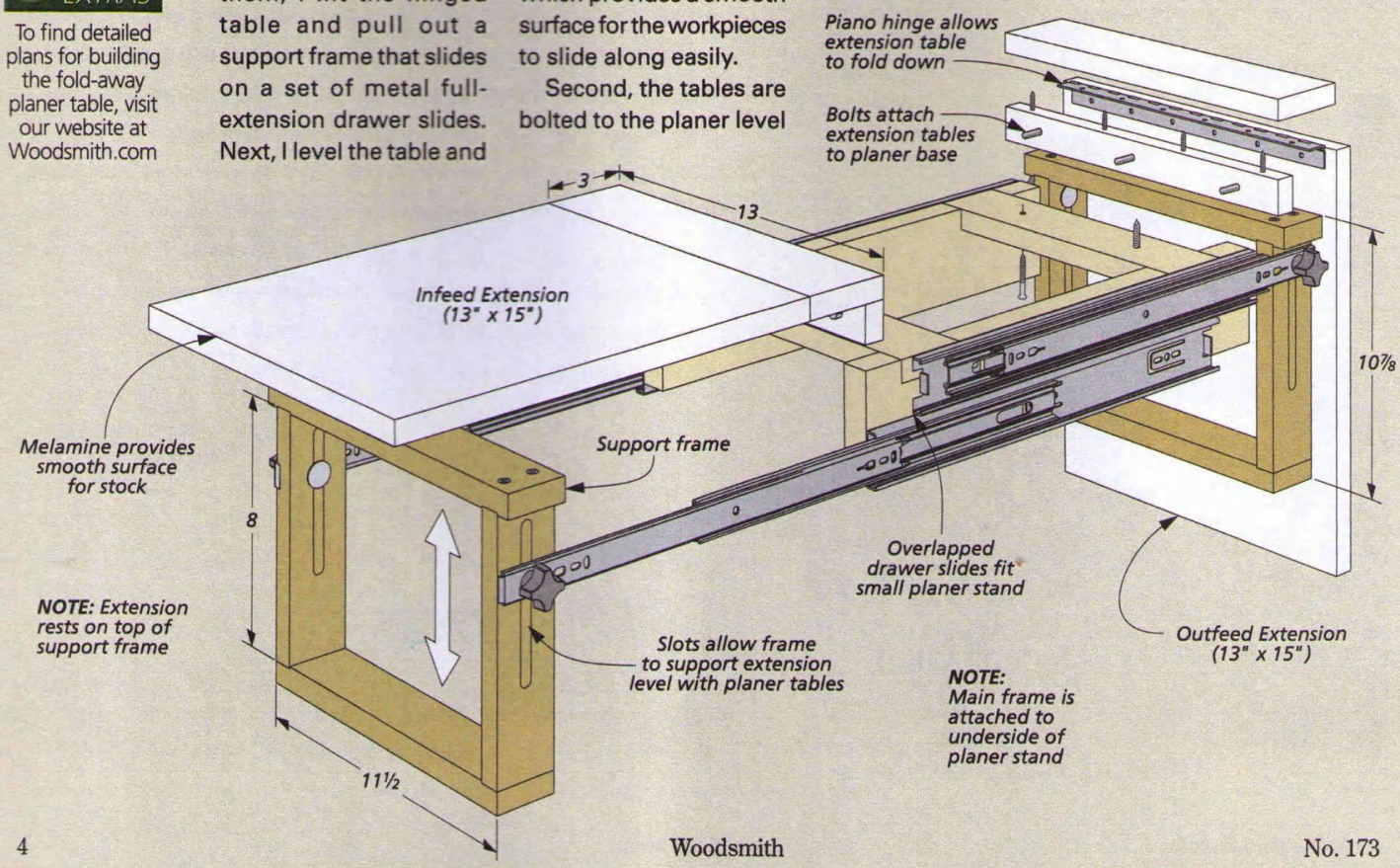

Adjustable Bench Dogs

I use bench dogs a lot while I'm working in my shop, and I've made my own "customized" dogs (pictured at right) to give me more versatility in clamping workpieces to my workbench.

Each dog is made up of a 1"-square block glued to a ¾"-dia. dowel. A threaded insert is installed in the block. The insert holds a long hex bolt that can be adjusted to hold my workpieces. A rubber cap protects the workpiece from being damaged by the hex bolt.

To use the dogs, you simply insert the dowel into a dog hole in your workbench. Next, tighten the bolts in each dog until you get equal clamping pressure on the workpiece. The pressure of tightening the bolts on the workpiece will hold the dogs in place on the bench.

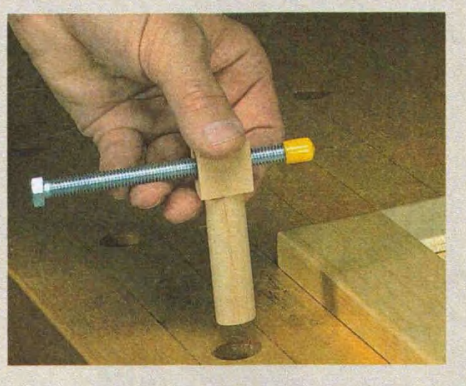

Making these saves time and money, and I can make as many as I need.

David Stockman
Glen Arbor, Michigan

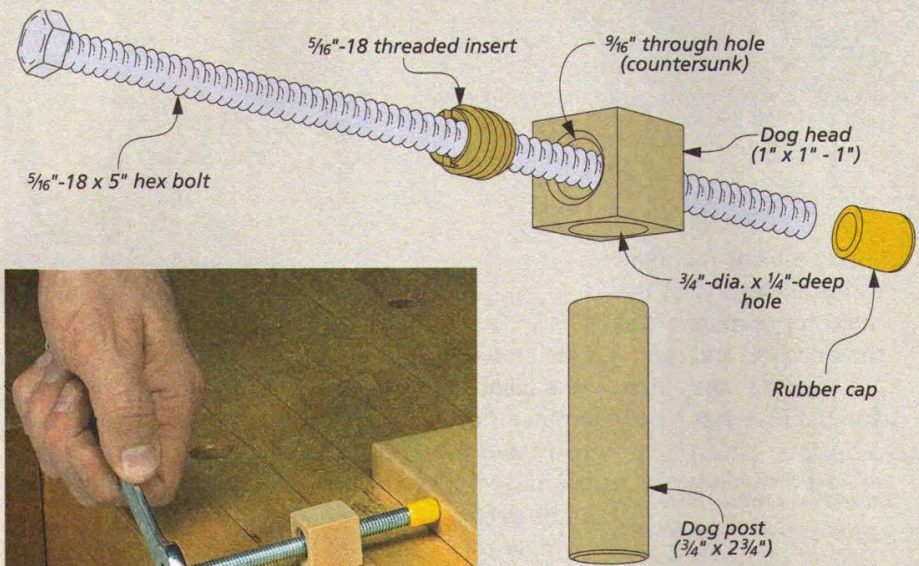

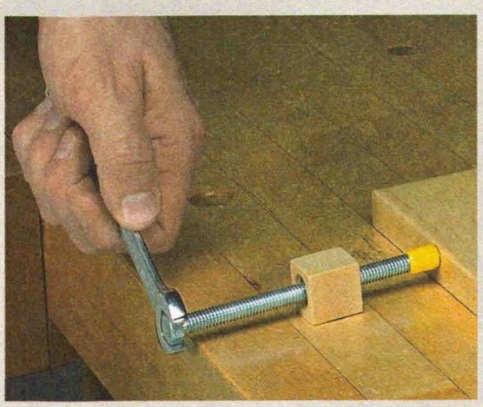

SUBMIT YOUR TIPS

If you have an original shop tip, we would like to hear from you and consider publishing your tip in one or more of our publications. Just go to our web site at *www.Woodsmith.com* and click on the link, "SUBMIT A TIP." Or you can mail your tip to:

Woodsmith Tips and Techniques
2200 Grand Avenue
Des Moines, IA 50312

Please include your name, address, and daytime phone number in case we have any questions. We will pay up to $200 if we publish your tip.

FREE TIPS BY EMAIL

Now you can have the best, time-saving secrets, solutions, and techniques sent directly to your computer. Just go to www.Woodsmith.com and click on "Sign Up for Free E-Tips." You'll receive one of our favorite tips by email each week.

Woodsmith

No. 173 October/November 2007

PUBLISHER Donald B. Peschke

EDITOR Terry J. Strohman

MANAGING EDITOR Vincent Ancona
SENIOR EDITOR Ted Raife
ASSISTANT EDITORS Mitch Holmes, Dennis Perkins, Carol Beronich
CONTRIBUTING EDITORS Bryan Nelson, Phil Huber, Randall A. Maxey
EDITORIAL INTERNS Abby Harvey, Catherine Seiser

EXECUTIVE ART DIRECTOR Todd Lambirth
SENIOR ILLUSTRATORS David Kreyling, Dirk Ver Steeg, Harlan V. Clark, Peter J. Larson, David Kallemyn
SENIOR GRAPHIC DESIGNER Bob Zimmerman
GRAPHIC DESIGNER Shelley Cronin
GRAPHIC DESIGN INTERN Emily Seibert

CREATIVE DIRECTOR Ted Kralicek
SENIOR PROJECT DESIGNERS Ken Munkel, Kent Welsh, Chris Fitch, Jim Downing
PROJECT DESIGNERS/BUILDERS Mike Donovan, John Doyle
SHOP CRAFTSMEN Steve Curtis, Steve Johnson
SR. PHOTOGRAPHERS Crayola England, Dennis Kennedy
ASSOCIATE STYLE DIRECTOR Rebecca Cunningham
ELECTRONIC IMAGE SPECIALIST Allan Ruhnke
SENIOR VIDEO PRODUCER Craig Ruegsegger
VIDEOGRAPHER Mark Hayes

Woodsmith® (ISSN 0164-4114) is published bimonthly (Feb., Apr., June, Aug., Oct., Dec.) by August Home Publishing Company, 2200 Grand Ave, Des Moines, IA 50312.
Woodsmith® is a registered trademark of August Home Publishing.

Copyright© 2007 August Home Publishing Company. All rights reserved.

Subscriptions: Single copy: $4.95. One year subscription (6 issues), $24.95. (Canada/International add $10 per year, U.S. funds.)
Canadian Subscriptions: Canada Post Agreement No. 40038201. Send change of address information to PO Box 881, Station Main, Markham, ON L3P 8M6. Canada BN 84597 5473 RT
Periodicals Postage Paid at Des Moines, IA, and at additional offices.
Postmaster: Send change of address to *Woodsmith*, Box 37112, Boone, IA 50037-2112.

www.Woodsmith.com

ONLINE SUBSCRIBER SERVICES

- **VIEW** your account information
- **RENEW** your subscription
- **CHECK** on a subscription payment
- **PAY** your bill
- **CHANGE** your mailing or e-mail address
- **VIEW/RENEW** your gift subscriptions
- **TELL US** if you've missed an issue

Click on the link, "MAGAZINE CUSTOMER SERVICE" in the list on the left side of our home page. Menus and forms will take you through any of the account maintenance services you need.

CUSTOMER SERVICE **Phone: 800-333-5075**

SUBSCRIPTIONS
Customer Service
P.O. Box 842
Des Moines, IA 50304-9961
subscriptions@augusthome.com

EDITORIAL
Woodsmith Magazine
2200 Grand Avenue
Des Moines, IA 50312
woodsmith@woodsmith.com

AUGUST HOME PUBLISHING COMPANY

Printed in U.S.A.

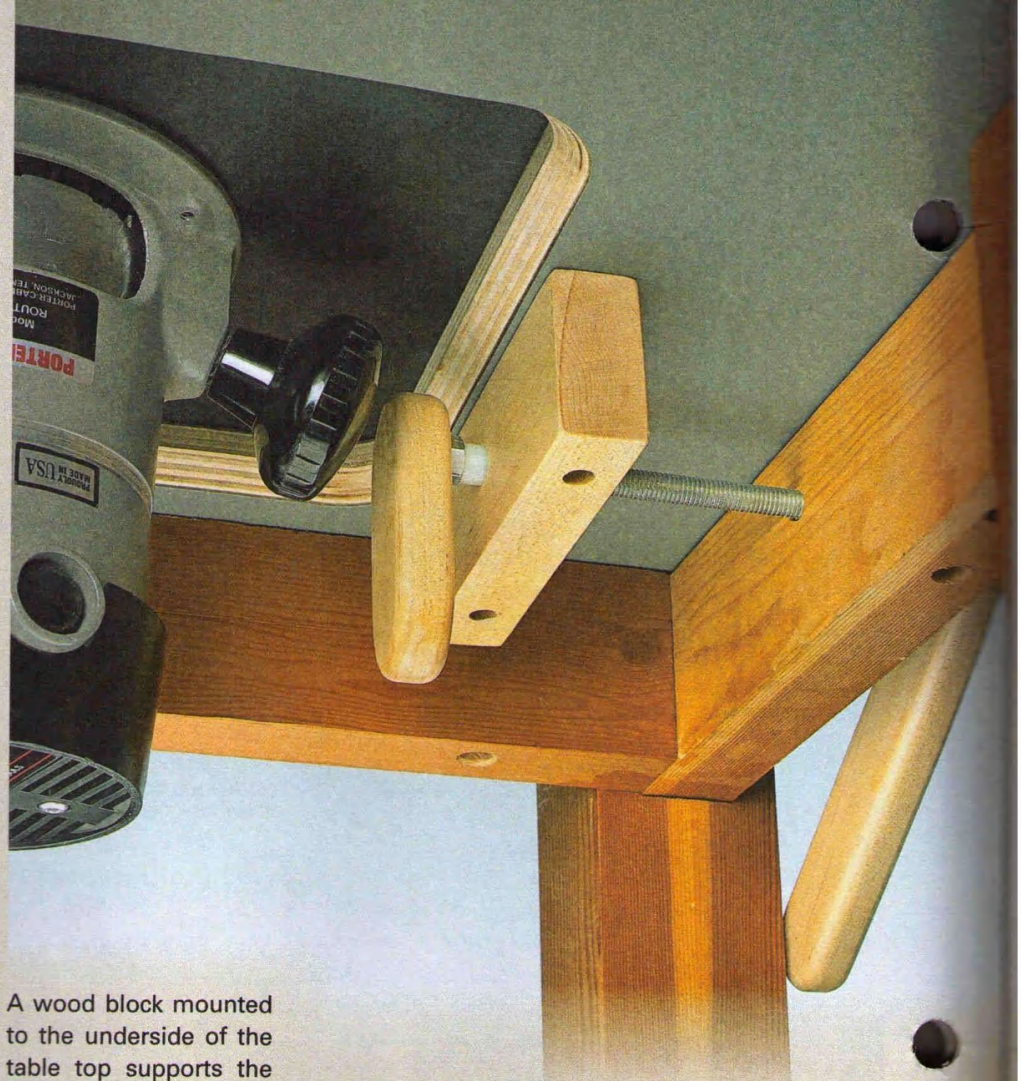

Router Plate Lift

When using my router table, it's inconvenient to reach under the table and push the router and insert plate up whenever I change bits. I wanted to be able to do everything from the top of the router table.

Rather than drill finger holes in the insert plate to lift the router out, I designed the system shown in the photo. It operates like a cam, allowing me to raise the plate without having to bend over and reach under the table.

A lever on the outside of the table is attached by a threaded rod to a cam located just inside the router opening. A wood block mounted to the underside of the table top supports the threaded rod and cam.

I located the lever and the cam just below the lower surface of the table top. When the router is being used, the cam and lever stay out of the way. But when it's time to change bits, you simply rotate the lever, which lifts the plate about ¾" above the table top. This is enough to allow you to get your fingers under the plate and lift it out. And when I replace the router, I can gently lower it back into the top using the lever, rather than dropping it into place.

Andrew Volk
Granite Bay, California

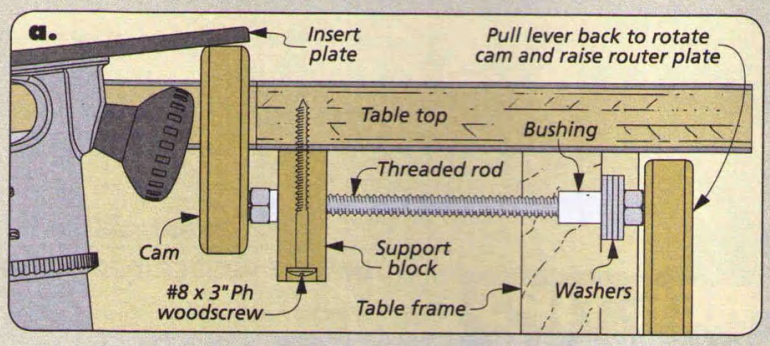

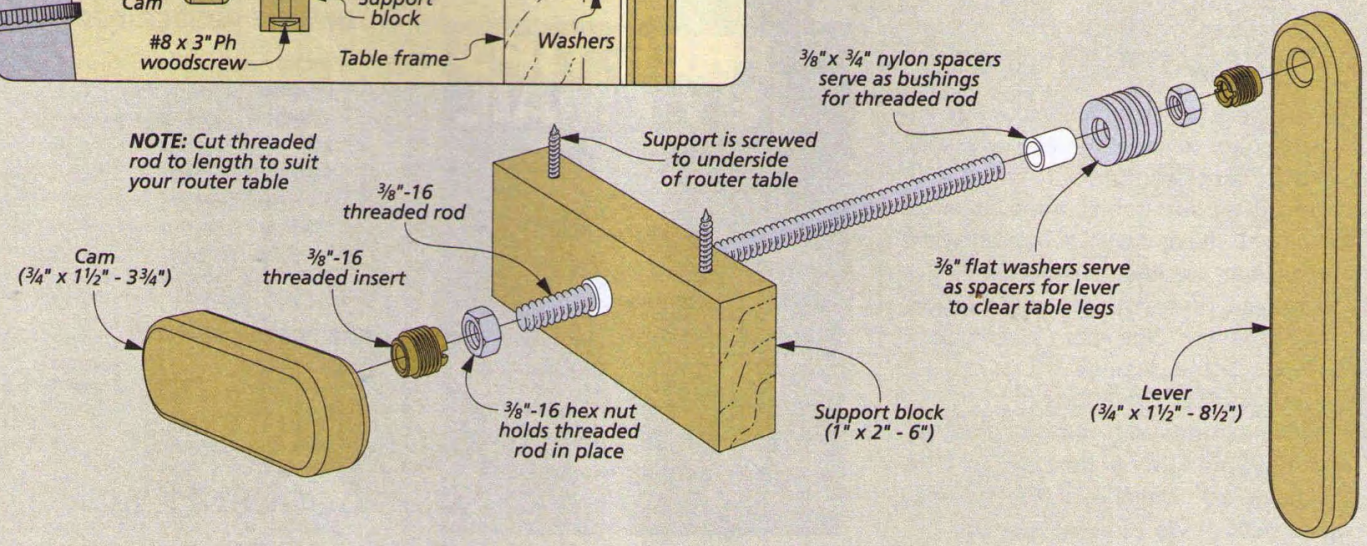

Saddle Square

When transferring layout lines from one side of a workpiece to the other, a combination square can be difficult to use. So, to solve this problem, I made a simple saddle square as shown here.

With this square, you can mark the layout line on one side of the workpiece, slide the square over the edge, line it up with the layout line, and mark the other side. That's much easier to do than "eye-balling" the lines with a combination square.

The square consists of a spacer the same thickness as the workpiece sandwiched between two long pieces of ¼" plywood. The spacer should be square with the two sidepieces. I secured the pieces together with screws.

Bob Kelland
St.John's, Newfoundland, Canada

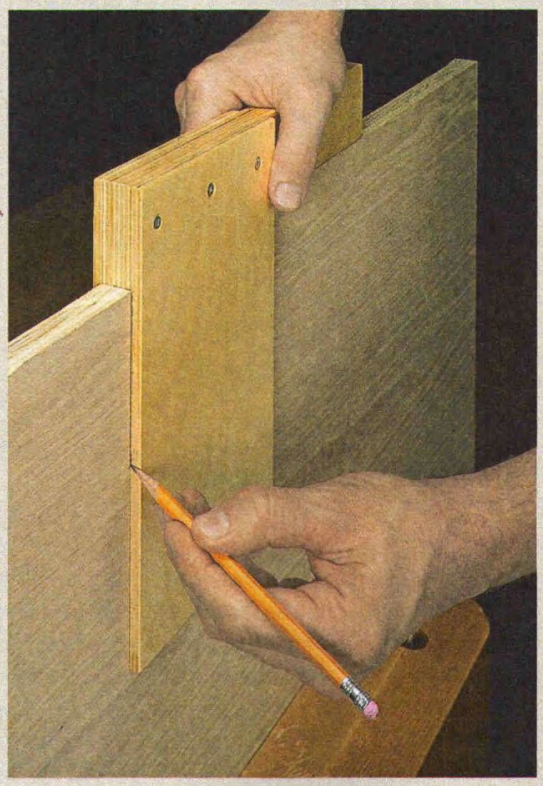

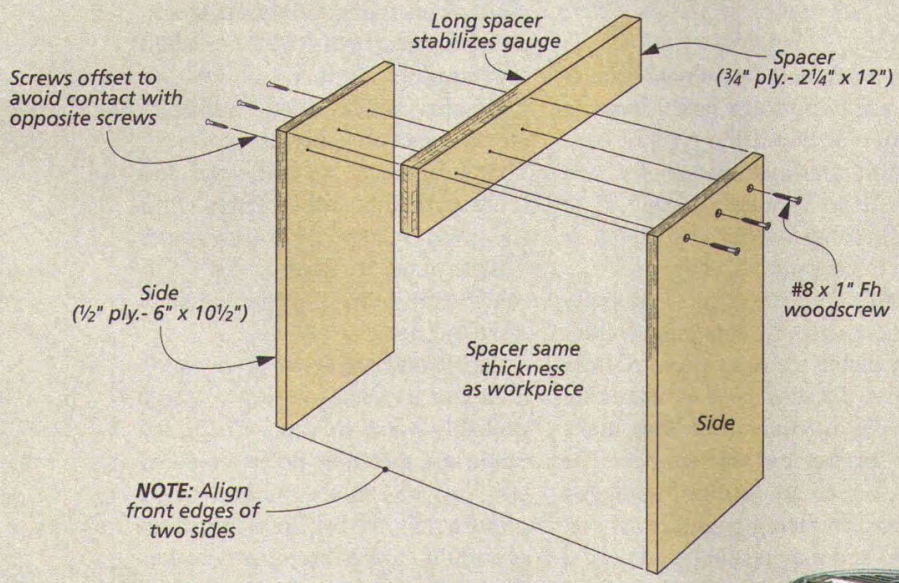

Quick Tips

IMPROVED DUST COLLECTION

To improve the dust collection capabilities of my tools, I use rubber-foam pipe insulation to seal the holes in the base of the tools. It's easily cut into small pieces and stuffed into open spaces. For about $2, I was able to greatly reduce the amount of dust in my shop.

Chris Leverett
Sandersville, Georgia

SAW TEETH PROTECTION

To protect the teeth of my pull saws, I slide them into empty cardboard tubes for paper towel rolls.

The thin cardboard easily fits over the blades without damaging the teeth. And they're flexible enough to be flattened to fit different blade sizes.

Serge Duclos
Delson, Québec, Canada

BENCHTOP STABILITY

Rather than clamp my benchtop tools to my workbench, I've mounted T-nut fasteners to various locations on my workbench.

After drilling "mounting" holes in my benchtop tools, the T-nuts provide anchor points for star knobs that secure the tools to the top of my workbench. An added benefit to using this method is that it speeds set-up time too.

Richard Gaudreau
Sanford, Maine

Win This Porter-Cable Variable Speed Router

That's right, send us your favorite shop tips. If your tip or technique is selected as the featured reader's tip, you'll win a *Porter-Cable* variable speed router just like the one shown here. To submit your tip or technique, just go online to *www.woodsmith.com* and click on the link, "SUBMIT A TIP." You can submit your tip and upload your photos for consideration.

The Winner!

Congratulations to Gordon Gaines of Oakdale, California. His fold-away planer table extensions were selected as the winner of the *Porter-Cable* router. His setup allows him to easily tuck the extensions away when not in use.

To find out how you could win a *Porter-Cable* variable speed router, check out the information on the left.

keeping your shop clean with Brooms & Brushes

Here's what you need to know to choose the right broom and brush for every messy job in your shop.

Smooth surface

The natural flare in horsehair makes it a good choice to pick up sawdust.

Semi-smooth surface

Tampico center surrounded by a horsehair and polystyrene mix is best for semi-smooth floors.

Multi-surface

The longer bristles on the back of this broom pull sawdust out of crevices.

Angle broom

Most angle brooms are made of synthetic material because of the length of the bristles.

A push broom and a bench brush are two of the most frequently used tools in my shop. Yet they aren't given the least thought until it's time to buy a new one. That's when you begin to realize there's more to choosing a broom or brush than meets the eye.

BROOMS

When it's time to buy a new broom, there are two things you'll want to consider: size and the type of bristles. And after making a choice, you can refer to Sources on page 51 to find out where to find the broom or brush that's right for you.

SYNTHETIC. Brooms made with polystyrene and polypropylene bristles are available for most types of floor surfaces. Because these materials are synthetic, manufacturers can make them for use on any surface. The fibers, which are artificially flagged (see box on facing page), resist corrosives and may be what you need if your garage doubles as a shop.

TAMPICO. Brooms made from tampico work best on semi-smooth surfaces. Tampico is a natural vegetable fiber derived from plants in the cactus family, which makes it strong, coarse, and stiff. The fiber is also resistant to mild solvents, so it's a good choice if you're sweeping up in the garage.

HORSEHAIR. While synthetic and plant fibers work well on most surfaces, nothing beats 100% horsehair for trapping sawdust.

Brooms made from horsehair work best on smooth surfaces. That's because it's soft and has more give than other fibers. Plus the natural shape of the horsehair bristles tend to flare at the ends, which traps tiny particles of sawdust and debris.

MULTI-SURFACE PUSH BROOM. If your shop floor has an uneven surface, you'll probably want to choose a broom made for multiple floor types. As you can see in the bottom detail photo at left, the bristles on the front of a multi-surface broom are thicker. This works to pick up heavier debris and get into small cracks and crevices. The bristles on the back of the broom are flagged to pick up fine

debris like sawdust. And they're slightly longer to get into crevices.

SMALLER MAY BE BETTER. Regardless of the size of your shop, I'd recommend a small broom. An 18" or smaller broom will sweep open floor spaces quickly and still allow you to get into tight places.

If you have areas in your shop where tools are stored close to each other, then I'd recommend an angle broom (bottom photo, left). These brooms are 9" to 12" wide and get into small spaces.

BRUSHES

There are almost as many shop brushes to choose from as there are brooms. The difference in brushes comes in the shape, rather than the material. Most bench brushes are made from horsehair, but goat hair is also a popular choice.

BENCH BRUSH. The standard bench brush is about 11" long by 2" to 2½" inches wide. You'll find this style of brush handy for benchtop cleanup. They're usually made of horsehair because of the natural flare in this material. Bench brushes made from synthetic material have flagged bristles to pick up small particles of sawdust.

FLARE-TIP BRUSH. The large flare-tip brush at lower right is perfect for getting into tight corners. The soft horsehair bristles won't scratch wood surfaces, but will pick up the smallest bits of debris on the bench or hiding in the corners of your latest project.

HORSEHAIR DETAIL BRUSH. For getting into very small places, the 1"-dia. horsehair detail brush, with flared tips, is a good choice. You can use this brush to clean up inlays or hand carvings. But I'd pick up a second one to clean the dust from small power tools or the inner workings of larger tools. While the bristles are soft enough for fine surfaces, the shape of the brush keeps them stiff enough to clean in tight crevices.

GOAT HAIR DETAIL BRUSH. Another alternative to brushes made with horsehair is goat hair. Goat hair is softer and finer than horsehair, making it a good choice for fine or delicate work, such as woodcarving or marquetry.

The brush comes in two widths, 3" and 1¾" set at varying lengths for a natural flag. A series of glued and pegged bamboo shoots make it comfortable to hold.

There is a brush made for just about every need. Your choice for a new broom or brush should be based on how you plan to use it and what you're sweeping. W

▲ This flare-tip bench brush gets into tight corners to remove sawdust and debris.

▲ A horsehair detail brush is good for cleaning carvings or small parts on tools.

Plain or Flagged

Two types of bristles are available on most brooms and brushes — plain and flagged (see drawings at right). Some bristles, such as horsehair and goat hair, are naturally flagged.

Plain bristles are usually synthetic and the blunt ends are good for scrubbing or picking up debris in cracks and crevices. Synthetic bristles are not always blunt, however. They can be split to imitate naturally flagged brushes.

Woodworking bench brushes are usually flagged to pick up sawdust easily. Floor brushes can be either variety.

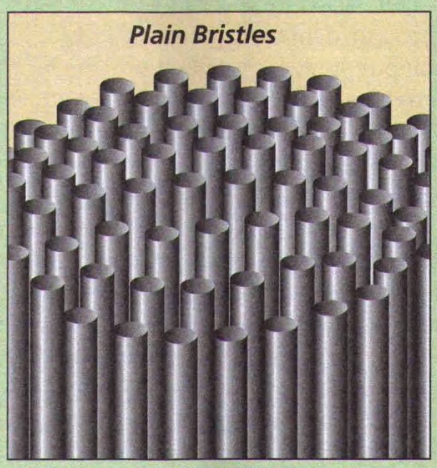

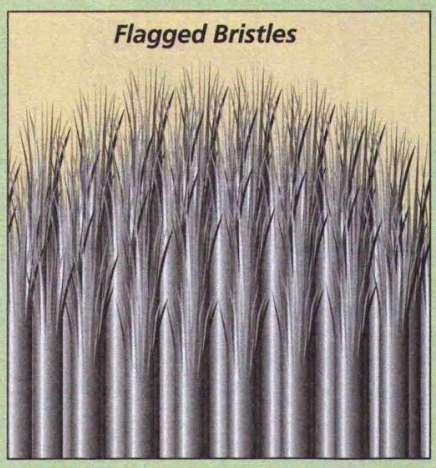

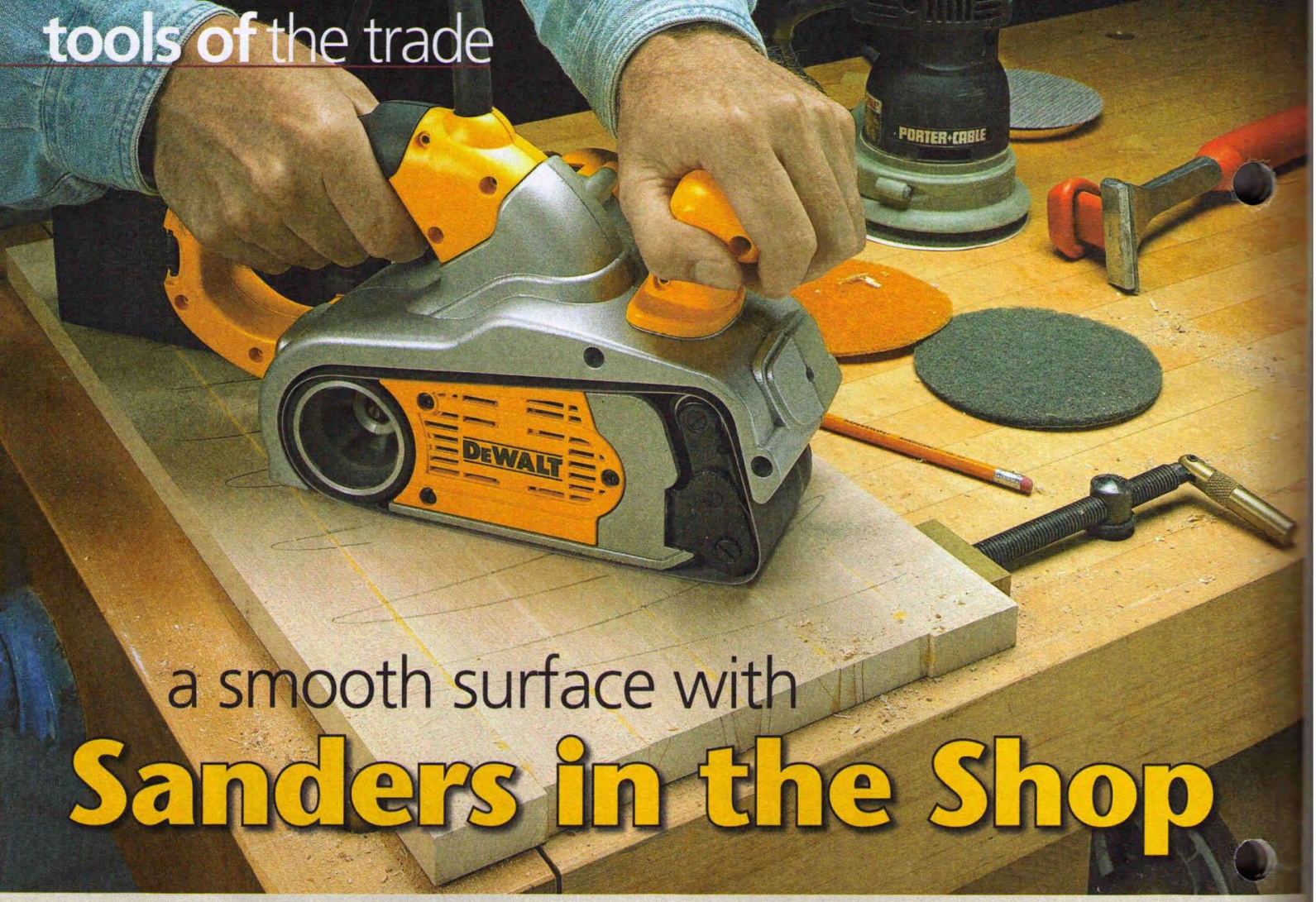

a smooth surface with Sanders in the Shop

Choosing the right tool and technique for the job can shave time and effort off your sanding tasks.

Random-Orbit Sander

Finish Sander

Detail Sander

Sanding is the necessary evil that comes near the end of just about every woodworking project. If you're like me, this is where your motivation starts to drag. But it's while you're sanding that a project really comes alive, showing off the beauty of the wood. And a good sanding job is also the key to adding the perfect finish to your project.

This is where the right power sander comes in, delivering great results in a short amount of time. From belt sanders for the rough work to random-orbit, finish, and detail sanders designed to fit into the tightest spaces, there's one for just about every smoothing and finishing task.

So, it's usually just a matter of matching the right tool to the job. And while operating these sanders doesn't involve a steep learning curve, there are still a few things to keep in mind when using each of the different types. Here are some simple techniques that will help you get a smooth surface, ready for a finish in no time.

BELT SANDER

Some woodworkers might argue that a belt sander isn't a tool often associated with fine craftsmanship. But the belt sander is a great choice for a number of everyday woodworking tasks. In fact, by using the proper techniques, a belt sander can save time and produce a dead flat surface.

Of course, belt sanders can hog off wood at a surprising rate, so they're not for use on delicate plywood veneers. But when it comes to leveling a glued-up panel that won't fit through your planer, a belt sander may be the best solution. It may not be the tool for a final finish, but it should still be a part of your sanding arsenal.

A QUICK CHECKUP. Before you can get good results with a belt sander, it's worth taking a few minutes to inspect the tool. The most important thing to look for here is the flatness of the platen (the thin metal plate under the belt). If it's bent, dented, or damaged, the sander won't leave a flat surface

and it may have a tendency to dig into the wood. The good news is that the platen is fairly easy to replace (your owner's manual will show you how). Other than that, you just need to make sure the belt is tightened and tracking properly before getting started.

SCRAPE FIRST. With your sander tuned up, you're almost ready to get started. But first it's a good idea to scrape off the glue squeezeout from the joints. The hardened beads of glue often have a soft center that will gum up your sandpaper in a hurry. A scraper does a great job of removing the squeezeout.

INITIAL FLATTENING. When that's done, I draw some pencil marks on the surface to help measure the progress. Then, I start with an 80-grit belt for most panels. This aggressive grit cuts quickly and makes short work of leveling the surface.

For these first few passes, you'll just want to keep the sander moving to avoid gouging the workpiece. Sanding across the grain will get rid of ridges and erase the pencil marks. Then, a couple of diagonal passes with a 100-grit belt levels the panel. By this point, it should feel flat to the touch, but you'll need to mark it to make sure.

CHECK YOUR PROGRESS. One way to do this is to use a straightedge and mark the low spots with a pencil. Step 5, at right, shows you what I mean. Then it's just a matter of sanding down the high spots until the panel is level.

Finish with the belt sander by making a final pass using a 120-grit belt and moving the sander with the grain. This removes the marks left by the previous grits and prepares the surface for further smoothing with a random-orbit sander.

How-To: Sand a Glued-up Panel

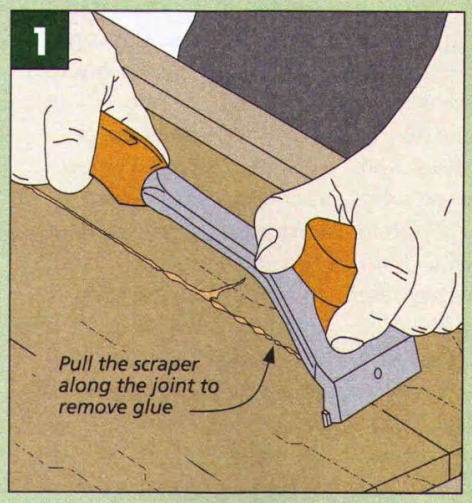

Scrape First. *Use a scraper to remove the beads of dried glue that have squeezed out of the joints during assembly.*

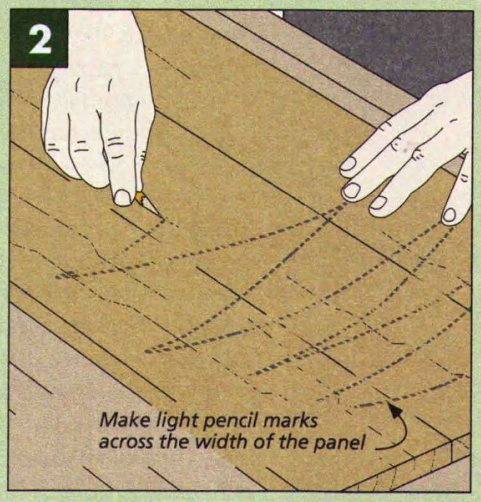

Draw Reference Lines. *Pencil lines across the panel allow you to see high spots and low spots as you sand.*

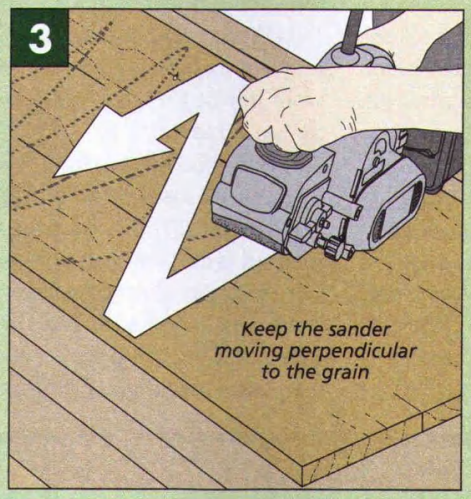

Sand Cross-Grain. *With an 80-grit belt installed, move the sander across the grain to level the surface of the panel.*

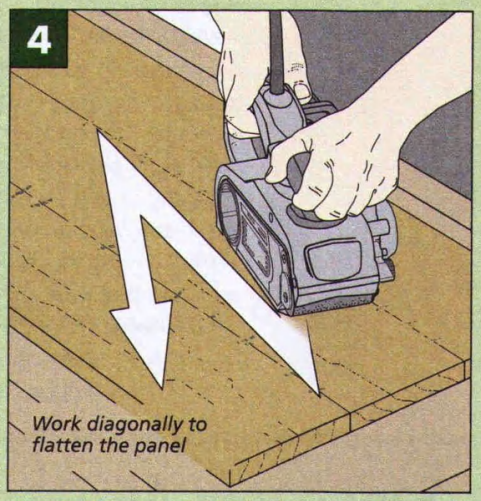

Sand Diagonally. *Switch to a 100-grit belt and move the sander at an angle to the grain, alternating directions.*

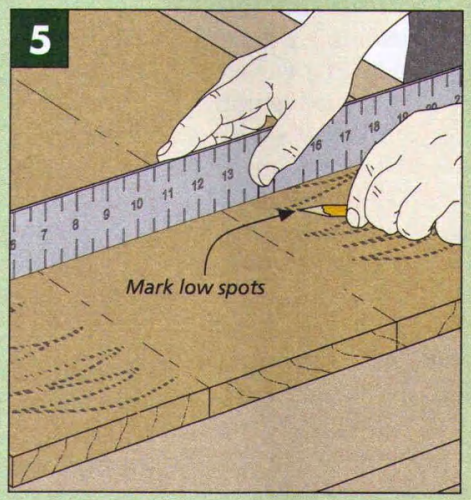

Check Your Work. *Lay a long straightedge across the width of the panel to identify and mark any remaining low spots.*

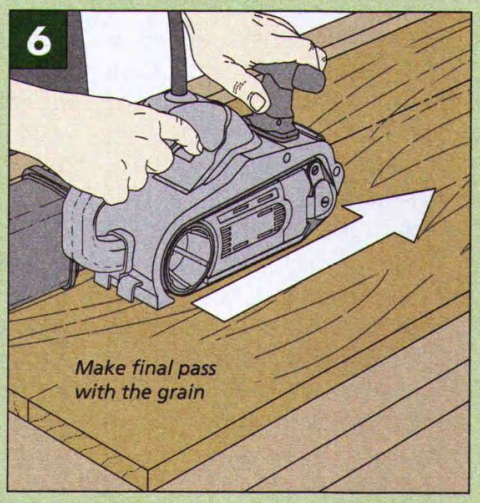

Sand With the Grain. *Finish by sanding with the grain to remove cross-grain scratches using a 120-grit belt.*

RANDOM ORBIT

For projects that don't require the rapid stock removal of a belt sander, a random-orbit sander, like the one shown at right, has become the go-to tool for most woodworkers. And their versatility is the reason why. They can be aggressive enough to remove a lot of material quickly, or gentle enough for the final sanding on your most treasured pieces.

But the biggest advantage of a random-orbit sander is you can sand in any direction without leaving cross-grain scratches caused by moving the sander against the grain. And manufacturers supply an assortment of sandpaper and other abrasives for these sanders (see the box below).

HOW THEY WORK. The mechanics of a random-orbit sander are designed to move the abrasive disc in both a circular motion and on an elliptical path in the opposite direction. This helps conceal the swirling marks made by the sandpaper and allows you to move the sander in any direction over the workpiece.

RANDOM-ORBIT SANDING TECHNIQUE. Using a random-orbit sander is such a common activity that we assume there's not much to it other than turning it on and moving it around. But there are a few key things to keep in mind.

First, and most important, don't press down on a random-orbit sander. You should use your hand to just guide the sander. Pushing down actually decreases the sander's efficiency by slowing down the rotation of the disc. That can cause the sander to dig into the wood, marring the surface.

Another common mistake is moving the sander too quickly across the surface. I like to take slow, overlapping passes moving only about one foot in ten seconds. This "feed rate" results in consistent smoothing and reduces the visibility of the swirl pattern left by the abrasive.

Finally, you need to take the time to carefully inspect the workpiece between grits. The key thing to keep in mind is that you want to remove imperfections in the surface with the first (lowest) grit. Each subsequent grit should only be used to erase the swirling sanding marks from the previous sheet. Usually, even on a fairly rough surface, you can start with a 120-grit disc and achieve a smooth surface. Moving through the grits (150, 220, and beyond) involves lighter sanding to make progressively finer and less visible scratch patterns.

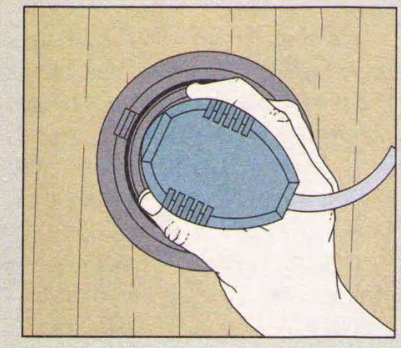

Don't Push Down. *Hold your hand on the side of the sander to guide the tool with the grain.*

Sandpaper Alternatives

When it comes to selecting abrasives for your sander, there are lots of options. In addition to conventional sandpaper, there are some newer products that you may want to consider. You can find out where to get them in Sources on page 51.

MICROPLANE. One of the most revolutionary sanding discs comes from *Microplane* (known for their line of razor-sharp rasps). Those same stainless steel cutting edges are now offered on hook-and-loop sanding discs. Available in coarse, medium, and fine (roughly equating to 40, 80, and 120-grit sandpaper) they work great, especially on rough-sawn wood.

ABRANET DISCS AND PADS. Although they look like drywall sanding screens, *Abranet* discs are great for woodworking. The woven material offers the added benefit of allowing your sander's dust collection port to work more effectively. To get the most out of them, however, you'll want to remove the pad on your sander and add the *Abranet* cushioned replacement pad.

NON-WOVEN PADS. Non-woven pads were not designed for sanding raw wood, but they excel at fine finishing work. For instance, the 1200-grit gold pad works exceptionally well when used between coats of sprayed or brushed finishes.

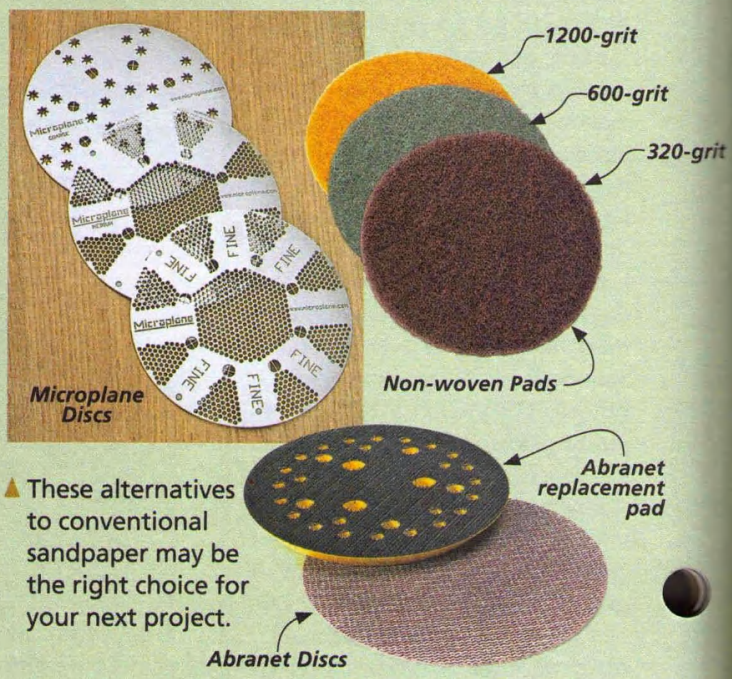

▲ These alternatives to conventional sandpaper may be the right choice for your next project.

FINISH SANDERS

Although you can prepare a surface for a finish using only a random-orbit sander, many woodworkers prefer to use a finish sander (photo below) for the final (highest) grit abrasive. These third- or quarter-sheet sanders have been around for a long time. Though they're no longer as common as random-orbit sanders, they still have their uses.

With a finish sander, you need to sand with the grain, just like you would by hand. That's because the motors in these sanders produce a straight line, back-and-forth motion designed to imitate hand sanding. Moving this sander across the grain will result in scratches.

But these models still come in handy, especially for sanding a large surface. For instance, I'll use my finish sander on a large table top with 320-grit paper to get an ultra-smooth surface. It's a lot easier than doing the same thing with a sanding block by hand.

DETAIL SANDERS

So far, the sanders I've talked about are all designed for flat surfaces. But what can you do when it's time to sand moldings or other curved surfaces? The answer may be found in a detail sander (above right).

Detail sanders take a multitude of forms. Most offer interchangeable heads with shaped profiles designed to get into tight spaces or match common moldings. These shapes include coves and beads of all sizes. Like a finish sander, detail sanders work in a back-and-forth motion, so you'll need to keep it moving with the grain. Another option for detailed, curved profiles is a hand-held, oscillating spindle sander shown in the box below.

DUST COLLECTION

Whatever type of sander you're using, it's going to produce a lot of fine dust. In addition to keeping the air in your shop breathable, dust collection in the sander also improves the quality of the finish by removing the small particles that would otherwise be ground back into the wood. Dust extraction also prevents the sandpaper from loading up too quickly.

Most sanders have dust collection ports that are easily adaptable for your dust collector or shop vacuum. Then it's just a matter of hooking up a hose and getting down to business.

Modern sanders have taken some of the tedium out of sanding. And by choosing the best tool and technique for your projects, you'll be assured of good results. W

Spindle Sander

Benchtop spindle sanders have been around for a long time and are handy for smoothing curves. The oscillating spindle minimizes sanding marks while providing an aggressive cutting action. They're great for most sanding jobs, but what do you do when you can't bring the workpiece to the tool?

Well, *Porter-Cable's* portable oscillating spindle sander allows you to bring the tool to the work. And that has some big advantages, especially when it comes to working on large, curved workpieces.

HOW IT HANDLES. This sander feels more like a router than a sander, so it's a breeze to work with and control. The base offers good visibility, making it easy to follow a pencil line. I like to use it for cleaning up the saw marks after making curved cuts with a jig saw or band saw. And since the sander accepts drums from ½" to 2" in diameter, you can get into the tight curves easily.

TABLE-MOUNTING OPTION. To get the best of both worlds, you can buy a mounting plate (similar to a router table baseplate) and fit the sander in a table. This allows you make a quick conversion to a benchtop sander. Refer to Sources on page 51 for more information on the sander and baseplate.

milescraft Design & Inlay Kit

An inexpensive, easy-to-use template system and a plunge router are all you need to add a decorative, carved detail to your next project.

A decorative carving on the crest rail of a cabinet or the top of a small box can turn an ordinary project into something really special. Unfortunately, I'm not much of a carver. That's why I decided to check out the Design & Inlay router kit from *Milescraft*. It offers a wide variety of pattern carvings that require only basic router skills.

▼ The *Milescraft* kit includes the router collars, templates, and patterns you'll need to get started.

HOW IT WORKS. The idea behind the kit is fairly simple. A collar attached to the baseplate of your router (similar to the collar you'd use with a dovetail jig) follows a template to rout the basic shape.

The template fits into a round, cogged opening in the plastic, snap-together base. When you rotate the template through the different lettered positions on the base, the repeated cuts form a design.

The result resembles a relief-carved pattern. With a total of 10 shapes in the two templates and 24 positions on the base, there are lots of possible combinations for creating interesting, geometric designs.

You can also use the templates to make through cuts in the workpiece. Another decorative option is to fill the routed patterns with a colored epoxy inlay. There's an example of both of these techniques in the photo on the opposite page.

SETTING UP THE ROUTER. The kit also includes a replacement baseplate drilled to accept a variety of routers. The two collars (17mm & 24mm), included in the kit will only fit into this base. But if you already have a set of collars for your router, you can skip switching baseplates and use them instead. They'll work just fine with the templates.

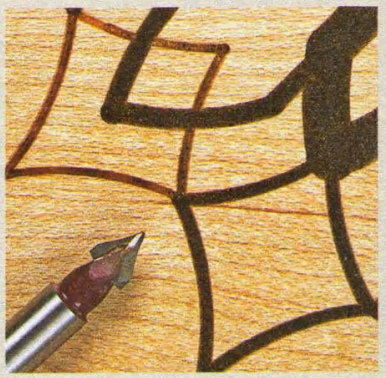

▲ ***Vary the Line Width.*** *The depth of the V-groove cut determines the width of the line.*

If you do install the replacement baseplate, it's a good idea to use the centering cone (also included in the kit) to align it. If the plate isn't centered, you'll end up with uneven cuts as you turn the router when following the template.

You can use a straight, core box or V-groove bit with the kit. *Milescraft* also sells a set of three bits for about $15. Refer to Sources on page 51 for information about where to find the kit and bits.

PICK A PATTERN. With the router set up, the next step is to choose a design. The manual is a good place to find some ideas. It contains several patterns and very specific instructions about how to make each design.

A pencil holder included in the kit gives you the option of drawing your design. It acts like a collar, allowing you to trace your ideas on paper before committing to routing the actual workpiece.

DESIGN LAYOUT. To position the design, I found it easiest to lay out center lines both horizontally and vertically on the workpiece. Then just match the lines to the marks on the base (see the box at the bottom of the page). You'll need to secure both the base and the workpiece to prevent movement. If the base moves during a cut, your results won't be consistent.

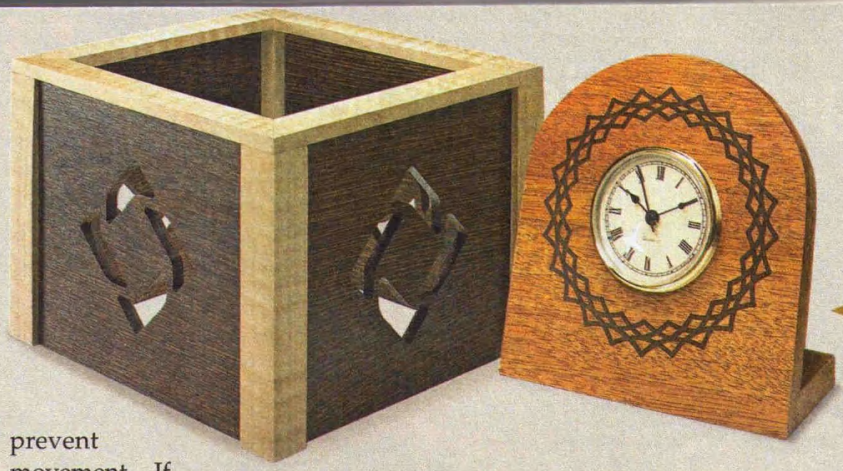

You can use the kit to make both through and relief cuts.

MAKING THE CUTS. A basic design involves routing one or more of the template windows at different positions. You change the position for each cut by rotating the plastic wheel one or more spaces, as directed by the instructions for that pattern. You can use the number on the template to align with the letters on the base to maintain consistent spacing.

Then it's just a matter of routing the design by riding the wall of the template, making the repetitive cuts that form the pattern.

You'll find it helpful to experiment on a piece of scrap to find the right bit depth. This is especially true if you're using a V-groove bit since a deeper cut results in a wider line. I found that ⅛" is a good starting depth for both relief carvings and cuts for epoxy inlay patterns.

RESULTS. I have to admit, I was pretty skeptical when I first saw the plastic kit and the geometric designs it produced. But after spending some time using it, I found the kit not only works as advertised, but is a welcome addition to the shop. And with a price of only $39, it's within reach of just about everyone's budget.

Editor's Note: Shortly after completing the testing and photography of the design & inlay kit, we learned of an upgrade from *Milescraft*. The new kit will include two additional templates and collars, as well as solid carbide down-cut spiral and V-groove router bits. The price the will remain the same.

Woodsmith GO ONLINE EXTRAS

To learn how to add an epoxy inlay to a routed design, visit our website at Woodsmith.com.

How-To: Create a Pattern

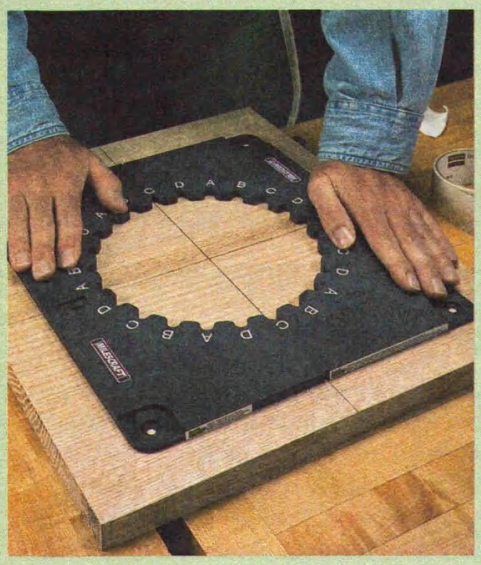

Secure the Base. *Align the layout marks on the workpiece with the marks on the base and secure the base with carpet tape.*

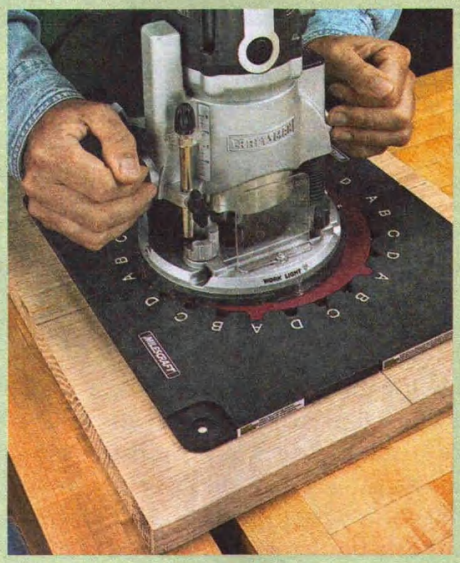

Rout the First Design. *With the collar riding along the wall of the template, rout around the edge of the window.*

Reposition the Template. *Now align the template number to the next letter in the series to create the pattern.*

six-candle Centerpiece

You can build this candle stand in just a few hours using pieces from the scrap bin and a few simple table saw techniques.

Making a candle stand is a great way to use small, prized pieces of figured or exotic wood. The one shown in the photo above is a good example. It gave me the opportunity to combine a nice piece of maple I'd been saving with some shorter cutoffs of cocobolo. And small projects like this also offer a great chance to showcase your joinery and finishing skills. It will get a lot of scrutiny because it invites close inspection, so it requires a lot of attention to detail.

Don't get me wrong, making this centerpiece doesn't involve complicated joinery or construction techniques. But it's the kind of project where even the smallest details — like sanding the end grain of the feet until it's almost polished — are very noticeable. And spending a little extra time sanding the finish between coats to get a perfectly smooth surface will also make a big difference. The result will be a welcome addition to any home.

making the FEET

One of the notable things about this project is its simplicity. It's just a base drilled to accept six glass candle holders with four contrasting hardwood feet.

As you can see in the drawings at right, the feet have a 1½" wide dado, so you'll need to cut it in two passes at the table saw (details 'c' and 'd'). Later, you can plane the blank for the base to fit the dadoes.

CUT THE DADOES. To make the dado cuts in the feet, I started with a couple of long blanks (detail 'b'). This way, you'll have plenty to hold on to when using the miter gauge to guide the workpiece.

I attached an auxiliary fence to the miter gauge to support the cuts. I also glued a piece of sandpaper to the face of the fence to prevent the blanks from "creeping" out of position. Then, with the dado blade set to ¾" wide, you can make the first cut using a ¾" spacer block clamped to the rip fence.

Now it's just a matter of rotating the blank end-for-end and repeating the cut on the other end. Then remove the spacer block to make the second cut. This method guarantees an evenly matched set of dadoes, exactly 1½" wide.

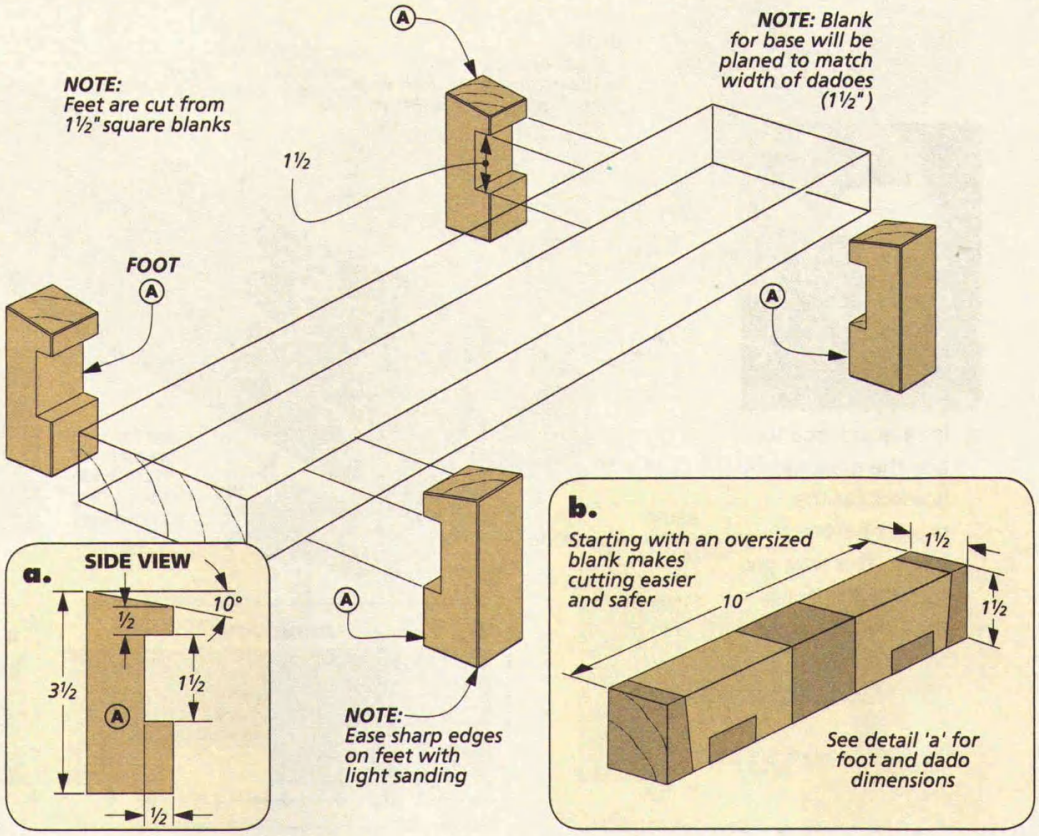

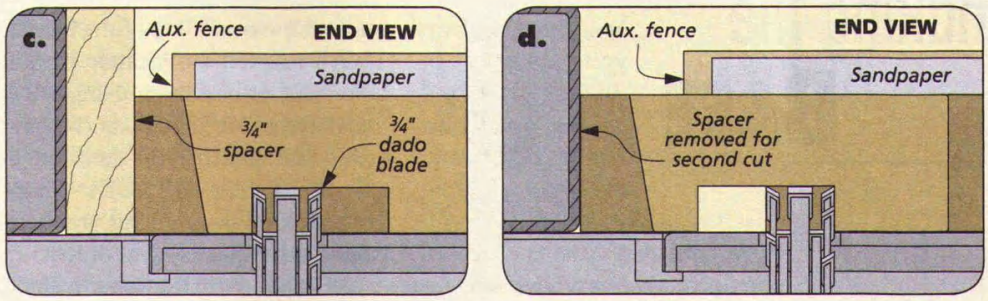

COMPLETING THE FEET. With the dado cuts complete, all you need to do is cut the bevel on the ends and cut the feet to length (see box below.)

I started by installing a good crosscut blade on the table saw to get the smoothest cut possible. Then I set the angle to 10° to make the bevel cut on each end. Finally, you can return the blade to 90° and use a stop block on your auxiliary fence to cut the feet to length.

How-To: Cut the Feet

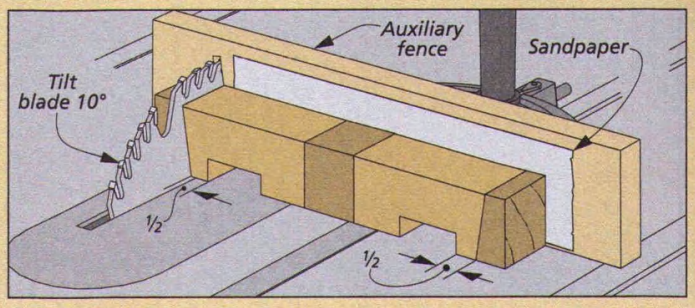

Bevel the Ends. *With an auxiliary fence on the miter gauge and a strip of sandpaper on the face to prevent the piece from slipping, cut a 10° bevel on each end of the oversized blank.*

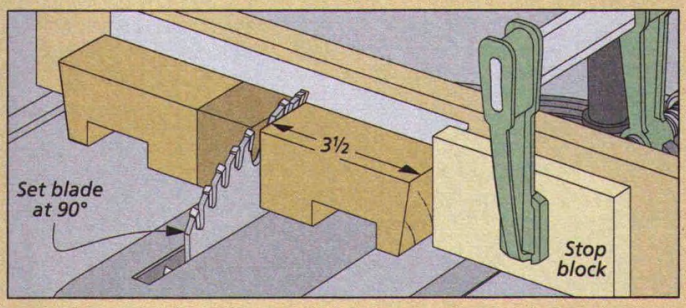

Cut to Length. *Now reset the blade to 90° and clamp a stop block to the fence to mark the finished length. The stop block will guarantee the feet are cut to the same length.*

▲ It's a good idea to buy the glass candle holders for the project before you begin. This way, you can size the holes for a perfect fit.

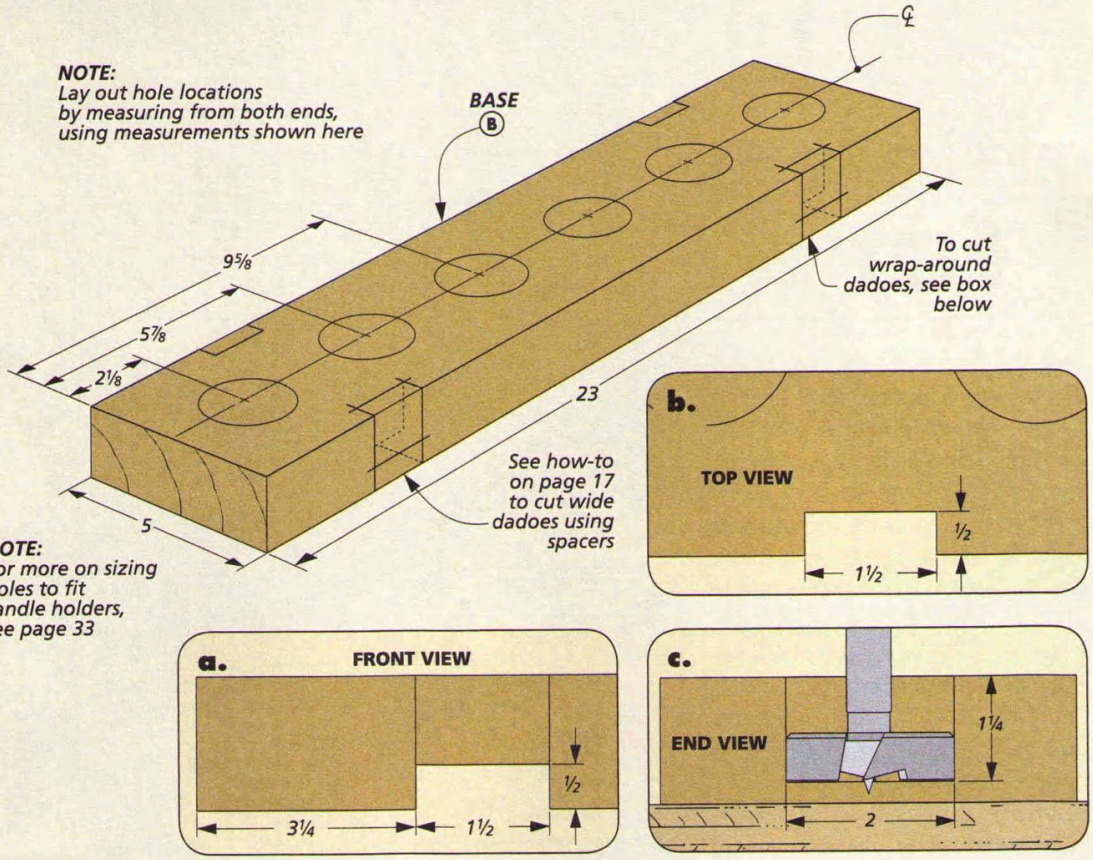

making the BASE

You can now turn your attention to the base of the centerpiece. You'll start with a solid blank, drill holes for the candles, make the joinery and bevel cuts, then rip it in half to add the decorative gap. Two stretchers in dadoes on the bottom of the base tie the two halves together.

DRILL THE HOLES. After jointing and planing the blank square, the next step is to drill the six holes for the candles. To get started, I marked the centerline of the blank. Then I marked the location of the holes and drilled them using a 2"-dia. Forstner bit. If your candles are a different size, or you don't have a large Forstner bit, refer to Shop Notebook on page 33 for an alternative technique using a router.

WIDE DADOES. With the holes drilled, you'll need to move to the table saw with a dado blade installed and set to make a ¾"-wide cut. I used the same setup to cut the "wrap-around" dado on the stand as I used for the feet. The box below shows the steps for making these wide dado cuts.

Using an auxiliary fence on the miter gauge and a spacer on the rip fence, you can make the first cut on the edge of the blank. Then rotate it to cut the opposite edge. You'll need to lay the piece flat to cut the bottom dado. Finally, just remove the spacer block and repeat the cuts on the opposite end of the blank to match the 1½" width of the feet.

THE BEVEL CUTS. Now you're ready to make the bevel cuts on the ends and sides of the blank. After tilting

How-To: Make a Wide "Wrap-around" Dado

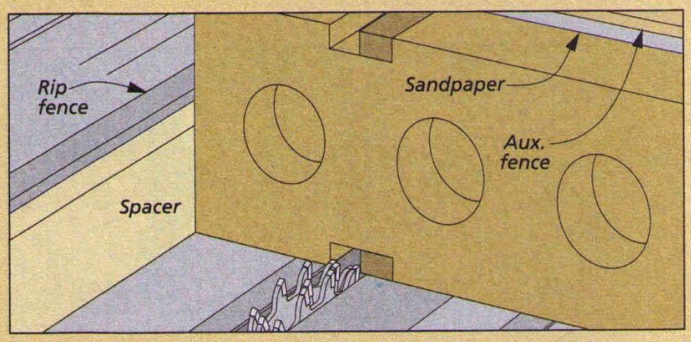

Dado the Edges. *With a spacer on the table saw's rip fence and an auxiliary fence on the miter gauge, set the rip fence to cut the first (outside) dadoes in both edges.*

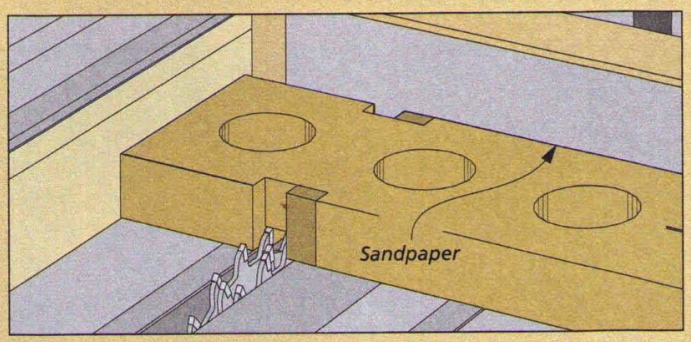

Cut the Bottom Dado. *After cutting both edges, lay the base flat and cut the bottom dado. To finish the cuts, remove the spacer from the rip fence and repeat the procedure.*

the blade on the table saw 10°, I made the cuts on each end. To make the cuts on the sides, you'll use the same blade tilt setting. All you need to do is set the rip fence and rip the matching bevel on each side of the base.

SPLIT THE BASE. With the joinery cut, the holes drilled, and the sides and ends beveled, the last step in preparing the base is to rip it down the center. Since you already have the centerline established from drilling the candle holes, you just need to return the saw blade to 90° and make the cut.

THE STRETCHERS. Two hardwood stretchers are screwed to both halves of the base to hold them together. They fit into the dadoes on the bottom of the base. You can cut them to size at the table saw. Then, you'll need to drill and countersink holes for the screws before moving on to assembly.

ASSEMBLY. Now that you've completed the parts, the assembly should go pretty smoothly. I started by cutting a ⅛"-thick spacer to place between the two halves of the base to hold them apart. Then, after screwing the stretchers in place, I fit the legs to the base with glue and clamps.

SAND & FINISH. As I said earlier, this is a project that needs a really thorough sanding and a flawless finish. I took extra care to sand the end grain on the base and legs all the way to 320 grit. This yields a smooth finish and brings out the interesting end grain patterns. To complement the smooth surface, I chose to spray the piece with lacquer. It dries quickly and builds up a nice finish in a hurry.

The result is a striking piece that's at home in just about any setting. Whether you place it on your dining room table or on the fireplace mantel, this centerpiece is sure to look great. W

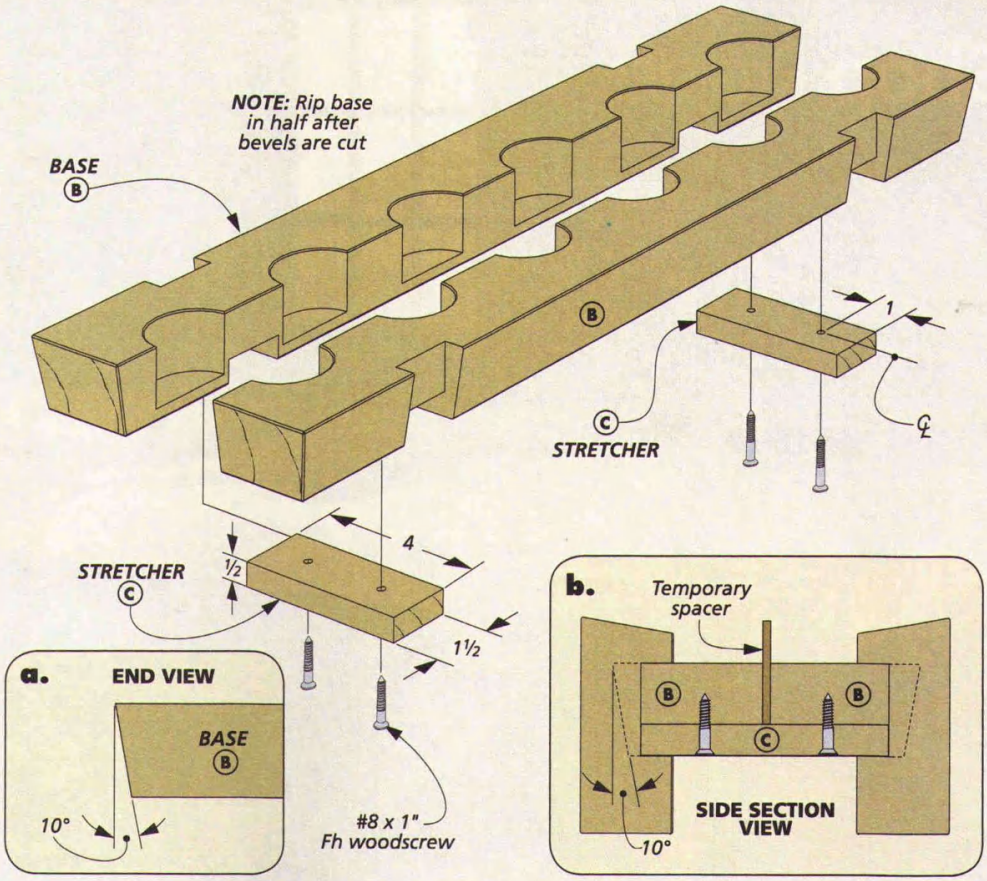

Materials & Cutting Diagram

2"x 2"- 18" Cocobolo turning blank (0.6 Bd. Ft.)

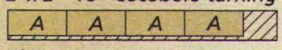

1½"x 6"- 24" Maple (2.0 Bd. Ft.)

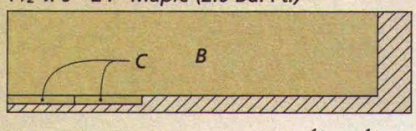

A	Feet (4)	1½ x 1½ - 3½
B	Base (1)	1½ x 5 - 23
C	Stretchers (2)	1½ x ½ - 4

- (4) #8 x 1" Fh Woodscrews
- (6) Glass votive candle cups w/candles

FINAL ASSEMBLY

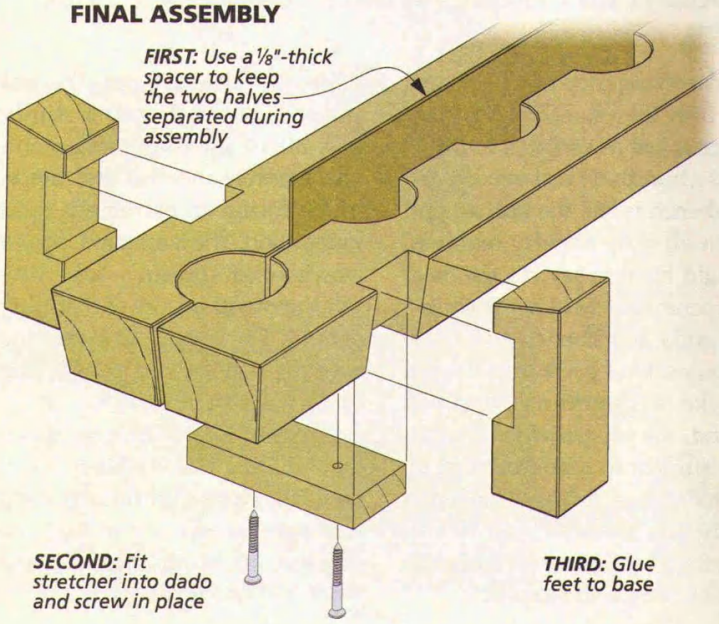

Shop Tip: Flat Feet

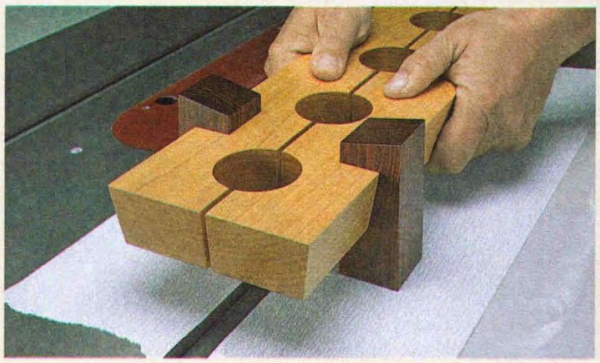

▲ To get the bottoms of the feet perfectly flat, use some adhesive-backed, 120-grit sandpaper on a flat surface, like your table saw.

traditional Workbench

This bench has all the classic features, but modern techniques make building it a snap.

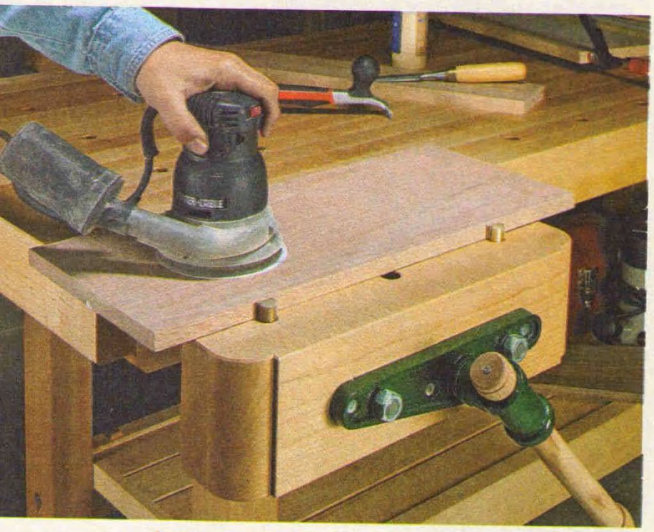

▲ The large front vise can be paired up with bench dogs to secure a workpiece. A handy tail vise adds extra clamping options.

Woodworking shops have changed a lot over the years. But one shop fixture is just as essential today as it was a hundred years ago. A solid workbench is still the hub around which all shop activity revolves. I would have to say it's the most indispensable "tool" in my shop.

A good workbench has three attributes. First it's sturdy enough to take a pounding, literally. Second, the top provides enough worksurface to accommodate all the tools and materials needed for the job at hand. And finally, securing a workpiece on the bench is quick, easy, and foolproof.

This workbench passes this test and then some. To call it sturdy is a bit of an understatement. The massive mortise and tenon frame forms an extremely rigid foundation. The laminated top is a woodworker's dream — large, very solid, and with plenty of clamping options. The large front vise or the tail vise, both with opposing dog holes, will handle any job.

But don't take this to mean that building this workbench will be a big chore. Without cutting any corners, we simplified the construction to minimize the hard work and maximize the return.

CONSTRUCTION DETAILS

OVERALL DIMENSIONS:
84"W x 39"D x 34½"H
(Includes vises)

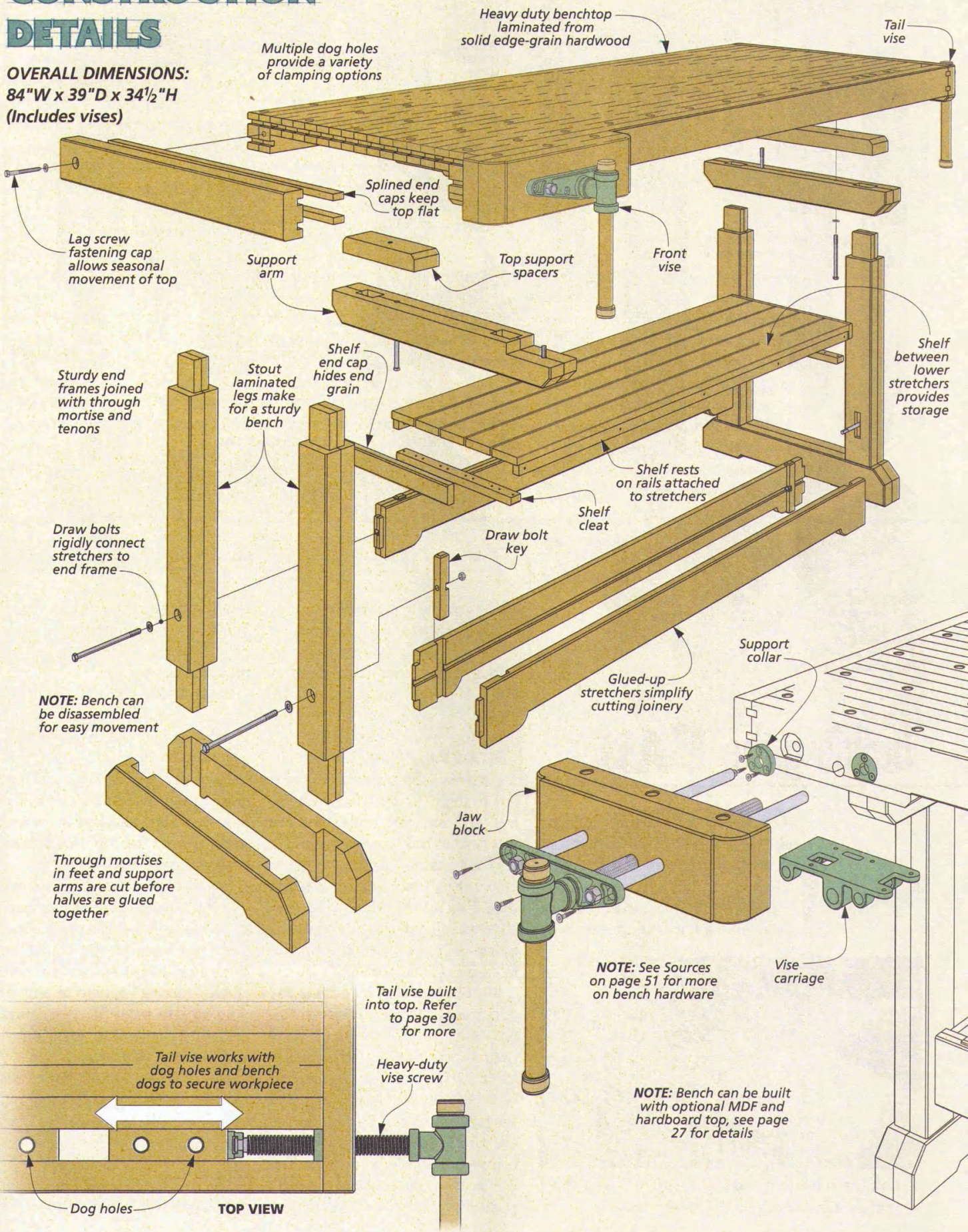

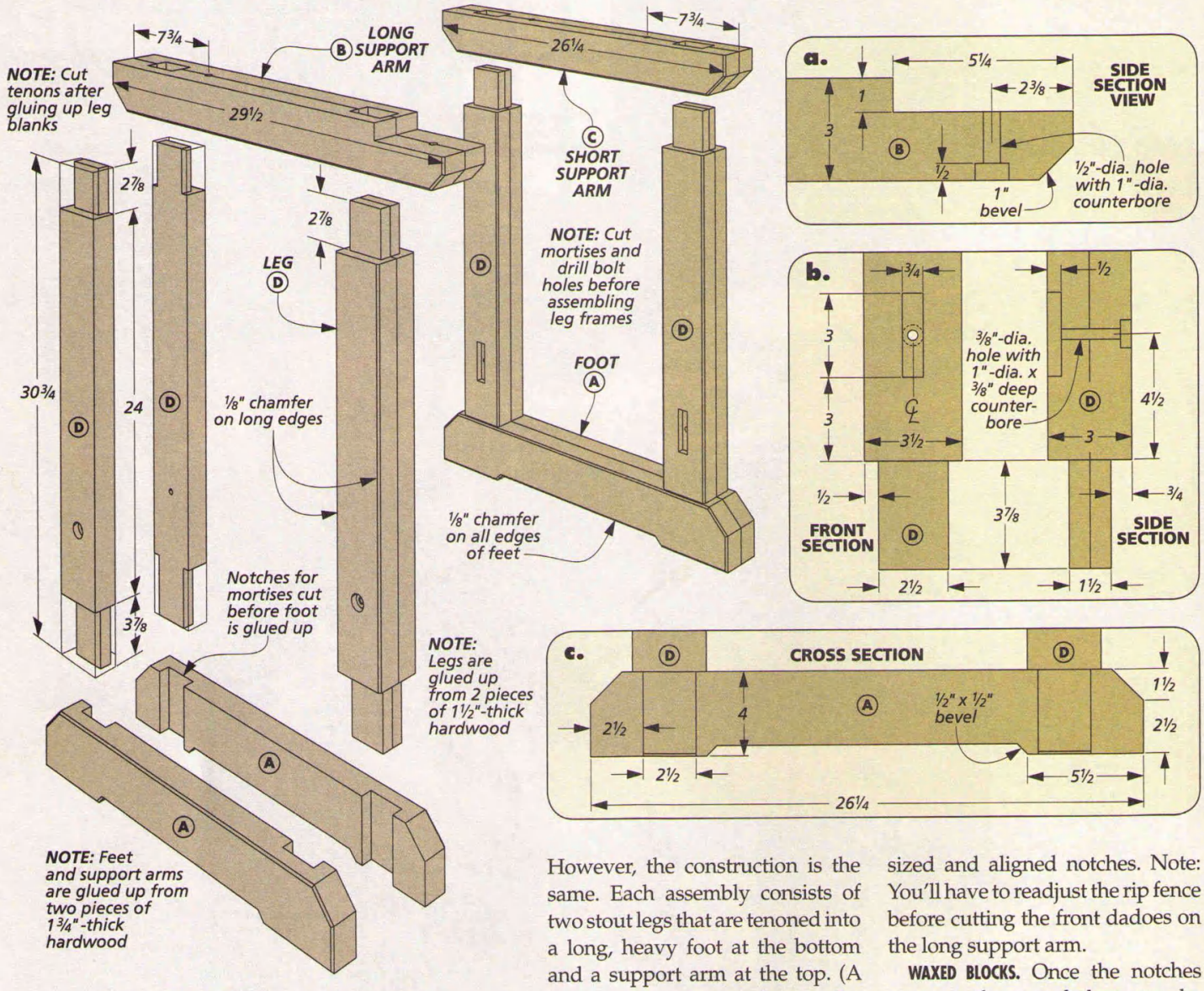

building the BASE

I started on the bench by building the sturdy base. This begins as a pair of end frames that will then be connected with two stretchers.

A QUICK LOOK. The end frames are very similar but not quite identical.

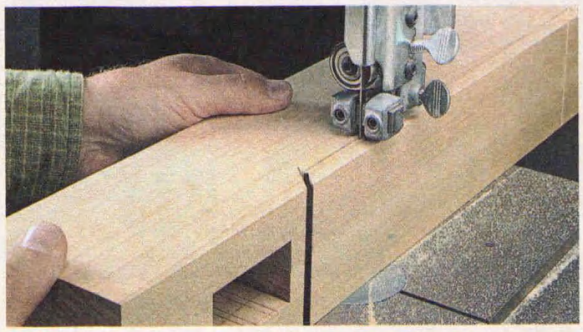

▲ Cutouts in the feet add stability to the base. You'll find an easy way to do the job on page 32.

However, the construction is the same. Each assembly consists of two stout legs that are tenoned into a long, heavy foot at the bottom and a support arm at the top. (A longer support arm braces the benchtop under the front vise.)

FEET AND SUPPORT ARMS. I like to cut my mortises first, then fit the tenons to them. So I started with the feet and support arms that are mortised to hold the leg tenons.

Both parts are glued up from two pieces of 1¾"-thick stock. But rather than glue up the blanks and then have to drill and chop the through mortises, I used a simple technique to "pre-cut" the mortises.

MORTISES. You start by cutting the two pieces for each blank to finished length and width. Then I used a dado blade on the table saw to cut wide notches (dadoes) in each piece corresponding to half of the mortise. When the two halves are glued together, you'll have a completed through mortise. The box at the bottom of the opposite page shows how to cut accurately sized and aligned notches. Note: You'll have to readjust the rip fence before cutting the front dadoes on the long support arm.

WAXED BLOCKS. Once the notches are cut, the two halves can be glued together. The challenge here is to keep the notches aligned until the glue dries. To do this, I inserted snug-fitting, waxed blocks in the mortises. Then all I had to do was make certain the top and bottom edges stayed flush.

SHAPING. When the clamps come off, you'll need to do a little shaping to complete these parts. First, each foot has a center cutout on the bottom edge to provide a more stable "footing" (photo at left). If you turn to page 32, you'll find some help in the form of a simple, step-by-step technique.

Next, the long support arm needs a notch cut into one end (detail 'a'). This provides clearance for the front vise hardware. A dado blade on the table saw will handle the job.

Finally, a bevel on each end, a pair of bolt holes for fastening down the

top, and a chamfer on the outside edges completes the arms.

LEGS. The legs are up next. Here, you can simply start by gluing up four blanks and cutting them to width and length. Just note that the legs are glued up from two pieces of 1½"-thick stock.

TENONS. Now you have more work for the dado blade. The ends of the legs need tenons to fit the mortises in the feet and arms. The tenons are all the same thickness and width, but those at the tops of the legs are shorter than those at the bottom. And to prevent the tenons from ever protruding, I stopped them a bit short of the ends of the mortises (detail 'c,' opposite).

ADVANCE WORK. Before gluing up the frames, you have one more chore to complete. The stretchers are joined to the legs using draw bolts for strength and a shallow mortise and tenon to help with alignment. So each leg needs a mortise and a counterbored bolt hole, as in detail 'b,' opposite.

I made the mortises by drilling out the waste, then squaring them up with a chisel. The drill press will handle the bolt holes.

ASSEMBLY. After chamfering the long edges of the legs, you can get out the glue and clamps. The key here is to make certain the joints are tight and everything is square.

SPACER BLOCKS. After one more addition to the end frames, you can move on. The top of each frame needs a spacer block to provide support to the center of the benchtop. These are simply cut to size, beveled, and screwed in place, as shown above. But before installing them permanently, I located and extended the holes for attaching the top through the two spacers.

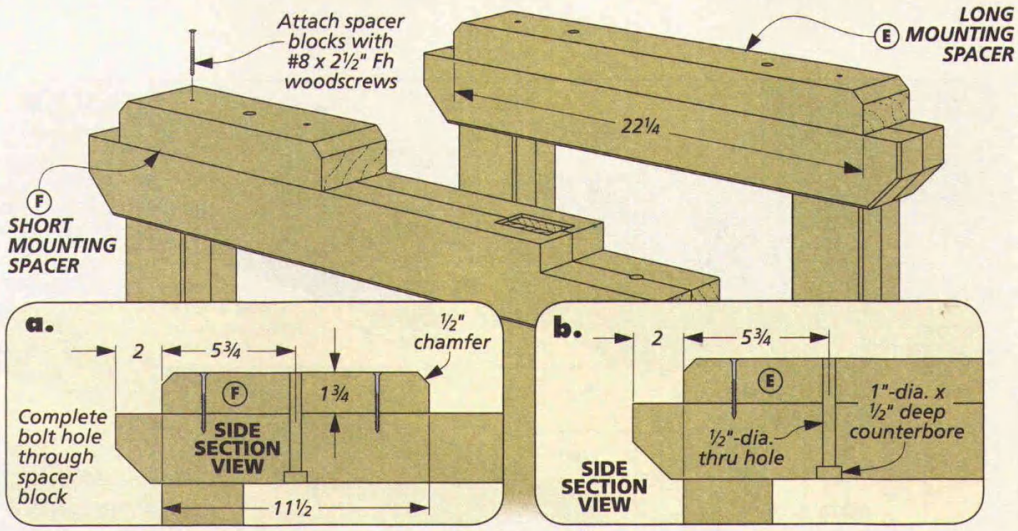

How-To: Mortise and Tenon

The key to accurately sizing and aligning the notches that form the mortises is to use the rip fence along with a spacer to guide the cuts (photo at right). The spacer is positioned in front of the blade to allow you to reference both shoulders of the notch with one setup (left drawings below). The spacer I cut (1¾" wide) was sized to work with a ¾"-wide dado blade.

TENONS. The four-shoulder tenons on the legs can be cut using a wide dado blade. For a more in-depth discussion of this technique, see the article on page 38.

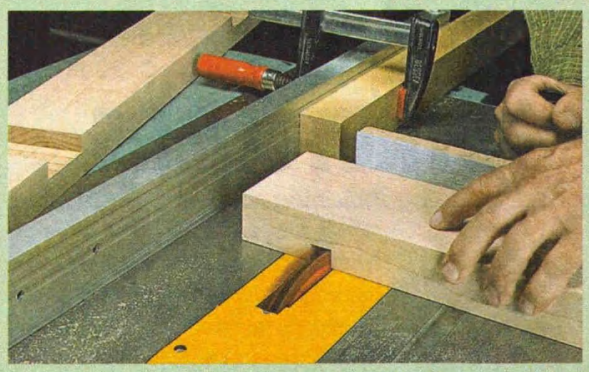

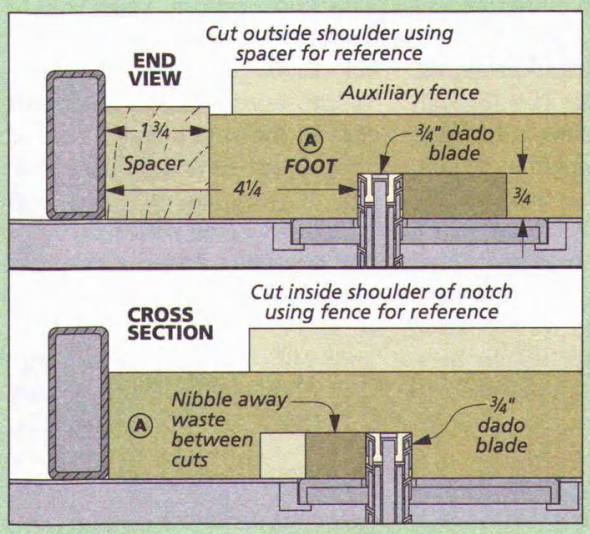

Wide Notches. *For the outside cut, the spacer is used to position the workpiece (top). The inside cut is made with the workpiece snug to the rip fence (bottom).*

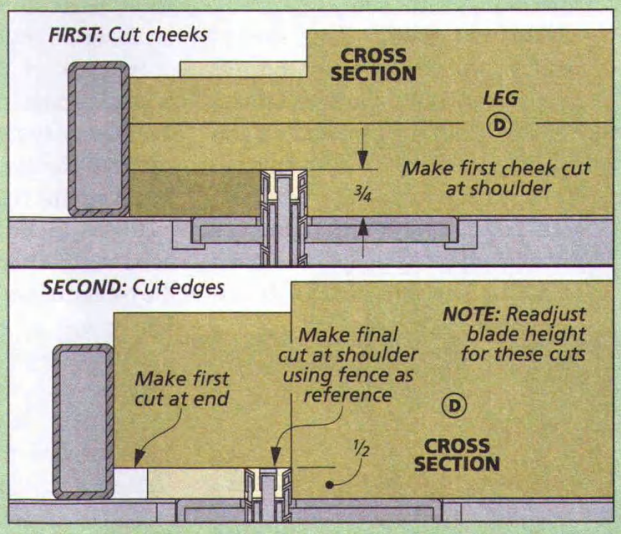

Leg Tenons. *Use a wide dado blade to cut the tenons on the legs. First cut the cheeks and long shoulders (top), then the edges and short shoulders (bottom).*

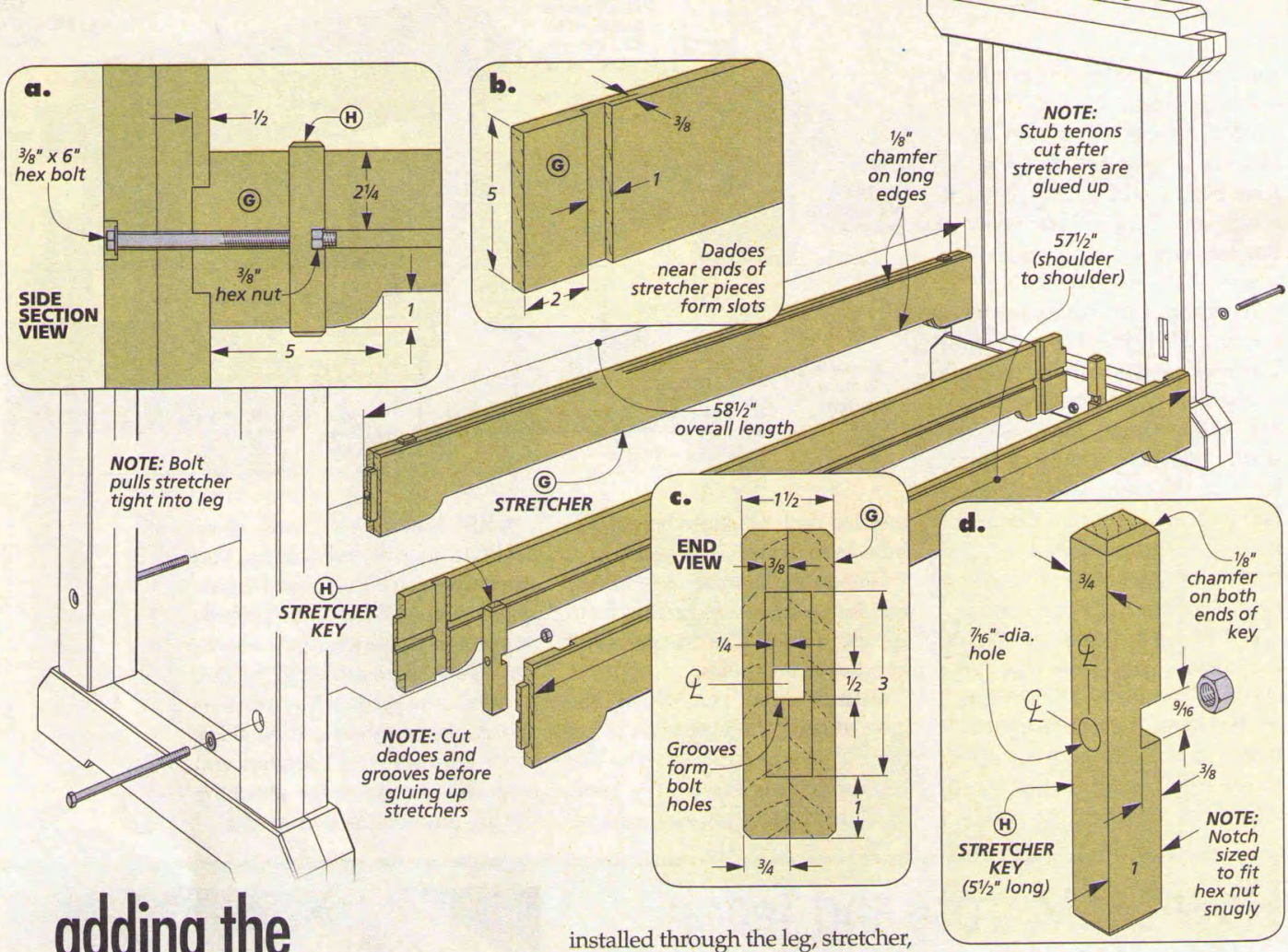

adding the STRETCHERS

Now you can start work on connecting the end frames with a pair of sturdy stretchers. The joinery you'll use to do this is the really interesting feature here.

DRAW BOLT JOINERY. The stretchers are fastened between the legs using drawbolt joinery. Take a look at detail 'a' above and I'll add a brief explanation. The stretcher has a vertical slot or through mortise near each end that captures a hardwood key. The key is slotted to hold a hex nut. When a bolt is installed through the leg, stretcher, and key and theaded into the nut, everything is pulled tightly together. A mortise and stub tenon helps keep the joint aligned.

▼ Tightening the draw bolt pulls the stretcher snugly against the leg to create a rigid connection.

THE JOINERY. To simplify making this joinery, each stretcher is glued up from two 3/4"-thick pieces of stock. This lets you create the slots for the keys with the same technique used to make the mortises on the end frames.

The box at the bottom of the opposite page takes you through the joinery steps. After cutting the stretcher pieces to length and width, you'll cut the dadoes that form the mortises (detail 'b'). Next you'll need to cut a narrow groove down the center of each piece (detail 'c'). This is just an easy way to create the "bolt holes" in the stretchers. And at this point, I glued the two halves together, using waxed spacers in the slots for alignment.

After removing the clamps, you can cut the short tenons on the ends of the stretchers at the table saw, as shown at right. I used some outboard support to help with this.

DETAILS. Now there are just a couple of minor details to take care of. First, I made a decorative cutout on the lower edge of each stretcher. (See Shop Notebook on page 32.) Once this is done, a chamfer on all the long edges is the last chore.

THE KEYS. Before assembling the base, you'll need to make keys to fit the slots in the stretchers. The keys should be sized to fit snugly in the mortises. The chamfered ends of the keys stand 1/4" proud of the stretchers at the top and bottom. To complete each key, I cut a centered notch across one narrow face, then drilled a bolt hole through the notch. A look at detail 'd' above will give you the details.

ASSEMBLY. Finally, you can pull the pieces together. First I inserted a "nutted" key in each mortise. Then before trying to assemble anything, I inserted a bolt into the end of the stretcher to test the position of the nut. When everything checked out, I bolted the stretchers between the two end frames.

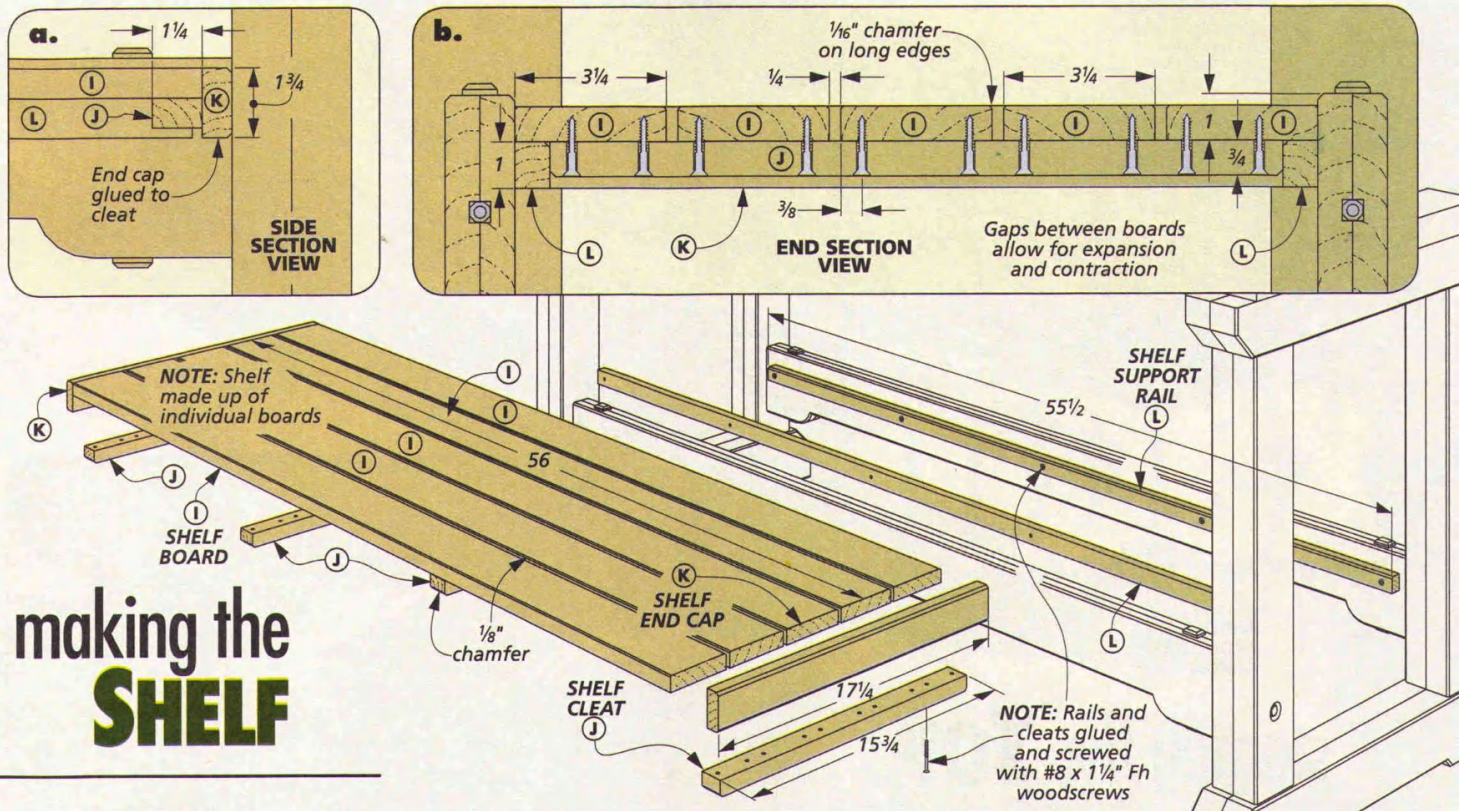

making the SHELF

The open space between the stretchers provides the perfect place for a storage shelf. So building a sturdy shelf for the base is the next task.

As you can see above, the shelf is made up of individual boards. They're fastened together on the underside with cleats, and capped off on the ends. I left gaps between the boards to allow for wood movement and easy cleaning.

SIMPLE CONSTRUCTION. The construction of the shelf doesn't require too much explanation. I started by cutting the five boards that make up the shelf to width and length. The shelf is sized (end-to-end) to fit snugly between the legs (detail 'a' above). Just remember to allow for the two end caps.

SHELF ASSEMBLY. Now you can cut the cleats to size and chamfer both ends at the table saw. To attach the cleats, I laid out the boards upside-down with spacers between them. A couple of clamps will hold them in place. Then position the cleats and attach them with countersunk screws. The end cleats should be flush with the ends of the shelf boards. This provides good gluing surface for the chamfered end caps that will complete the shelf (detail 'a').

The final step is to glue and screw a pair of support rails to the stretchers, as shown in detail 'b.' The shelf simply rests on the rails — no fasteners are necessary.

How-To: Stretcher Joinery

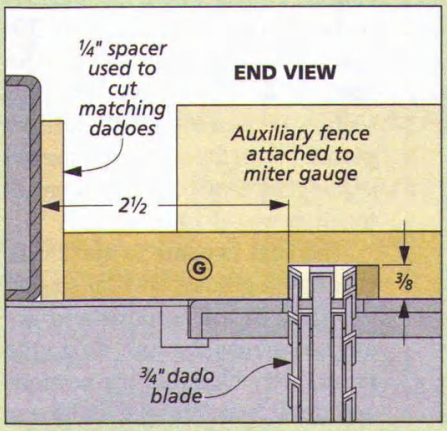

Mortises. *The mortises that hold the draw bolt keys are formed by cutting matching dadoes in each stretcher half.*

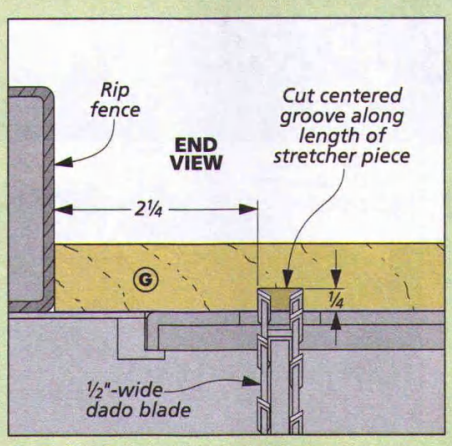

Bolt Groove. *A centered groove cut on the inside face of each stretcher half creates the holes for the draw bolts.*

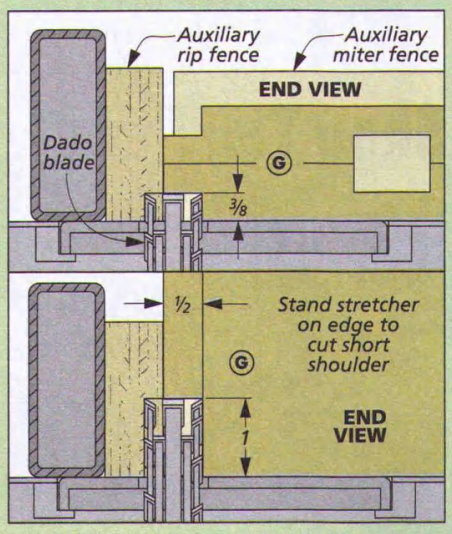

Stub Tenon. *Once the stretchers are glued up, short tenons can be cut on the ends to fit the leg mortises.*

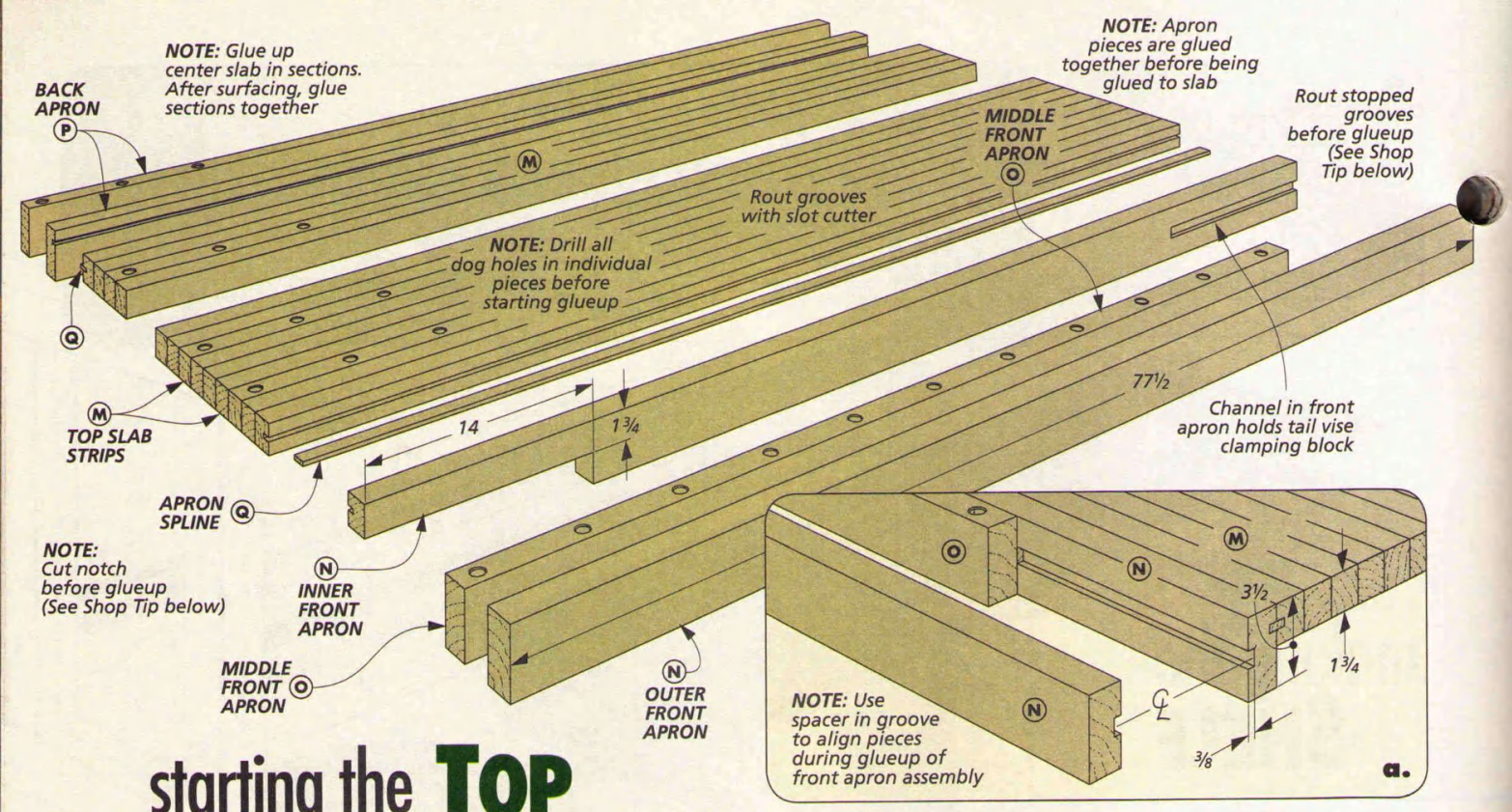

starting the TOP

With the base completed, you can get down to building the real business part of the bench — the top. This benchtop features laminated, hardwood construction, two vises, and an accompanying series of dog holes for each. It may look complicated to build, but the trick is to break the construction down into small, manageable sections and then bring them all together.

THE BASICS. As you can see in the drawing above, the top is made up of a laminated, center slab with a thicker apron assembly attached to each side. Caps will be added later to close in the ends.

CENTER SLAB. To make the top, you'll build from the inside out, starting with the center slab. The slab is glued up from 13 strips of 1¾"-thick stock. The strips are ripped from a wider board and then turned on edge for the glueup. This will create a top that's more stable.

THE ORDER. There's a sequence to gluing up the slab that will make the job easier and save you some effort. First, I ripped all the strips to rough width (1⅞"). Then I cut them to rough length (about ½" long). Next, you can lay out dog holes on three strips and drill them at the drill press. Just remember to allow for the extra length when laying out the dog holes.

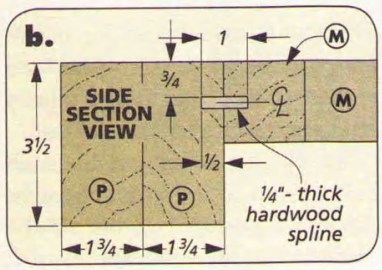

Rather than gluing up all the strips at once, I tackled the job in stages. First, I glued up narrow sections (3, 3, 3 and 4 strips). This "partial" glueup was easier to manage and allowed me to surface each section by passing it through the planer. When the sections come out of the planer, you can glue them all together two at a time.

The keys here are to make sure that the dog holes end up spaced properly in the sections and are aligned across the top. To do the latter, I dry clamped the sections and drew layout lines to guide me (upper right drawing, opposite).

Once the glueup is complete, the next step is to trim the slab to its

Shop Tip: Front Apron Details

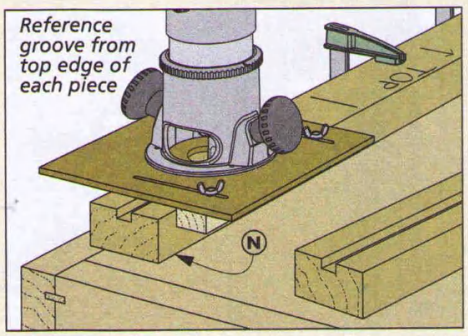

Stopped Grooves. *A hand-held router with a shop-built edge guide allows you to rout grooves that line up across the channel.*

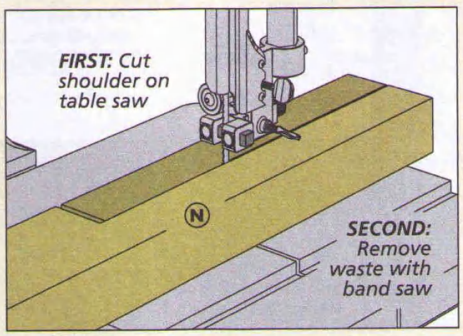

Notch. *I notched the inner apron piece by cutting the shoulder at the table saw and then removing the waste at the band saw.*

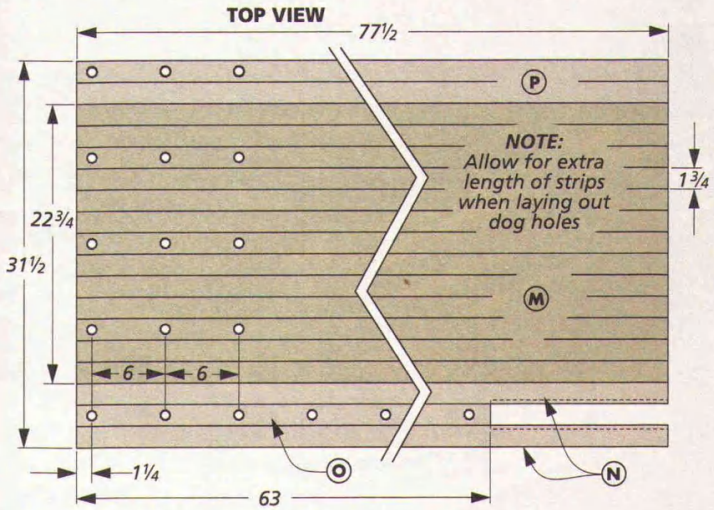

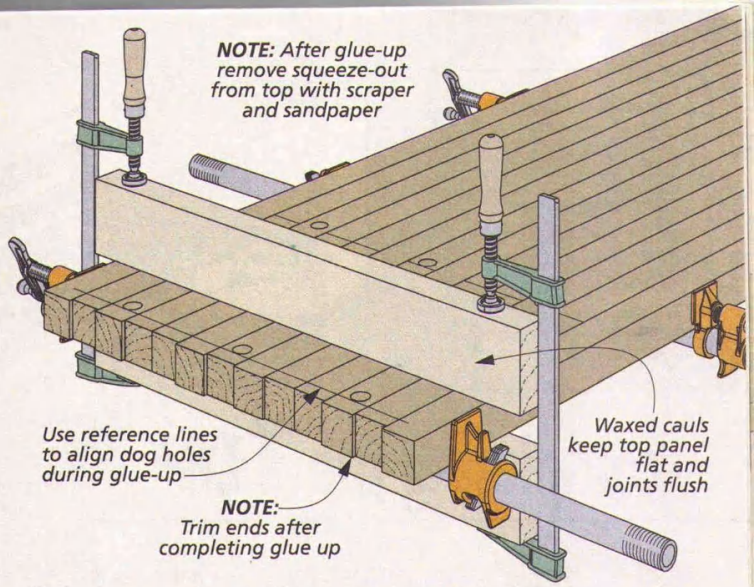

final length. A router, a long straight bit, and a straightedge clamped across the top will do the job.

FRONT APRON. Next, you're going to work on the front apron assembly. This part of the top accommodates both the front and the tail vise.

The front apron consists of three, 3½"-wide pieces. Like the center slab, they're ripped from 1¾"-thick stock and then glued face to face. As you see at left, the shorter center piece creates a channel for the tail vise block and contains the dog holes for use with the vise.

ALL THE DETAILS. I started by cutting the pieces to rough width but finished length. This assembly will be too thick to trim to length later.

After drilling the dog holes in the center piece, you can set it aside and work on the inner and outer pieces. The tail vise end of each piece has a stopped groove on the inside edge. The grooves will mate with runners on the clamping block to guide it in the channel. A hand-held router with an edge guide worked well for this job, as shown in the Shop Tip on the opposite page.

The front vise end of the inner piece also needs work — a notch to provide clearance for the vise hardware. Again, the Shop Tip box at left will give you help with this.

At this point, the three pieces can be glued together. Since they're already cut to length, take care to align them end-to-end. Once the glue is dry, you can plane the assembly to final thickness.

THE BACK APRON. Before gluing the front apron to the slab, I worked on the much simpler back apron assembly. Both aprons will be attached to the center slab with splines, and it makes sense to do all this joinery at the same time.

The back apron is made up of two pieces of 1¾"-thick stock. The only detail to attend to is drilling three dog holes on the outer piece. Then the pieces can be glued together, making certain to align the ends.

After planing the back apron assembly to final thickness, both aprons are ready to be attached to the center slab. As I mentioned, the two aprons and the slab are joined with hardwood splines. This joinery mainly serves to keep the sections aligned during assembly.

A slot cutter in my router made quick work of the spline grooves on the four edges. And after cutting hardwood splines to fit, you can glue up the slab and aprons. It'll be easier to keep the ends aligned if you do this one at a time.

DESIGNER'S NOTEBOOK

An Optional Top

Woodsmith GO ONLINE EXTRAS

For more information on using a guide block to drill the dog holes, visit Woodsmith.com

If you want to save yourself a little work and material cost without sacrificing any of the top's great features, you can make an MDF and hardboard center slab in place of the laminated hardwood slab.

This optional surface is designed so that all of the other details remain the same. You simply glue up two layers of ¾" MDF and a layer of ¼" hardboard to make a 1¾"-thick slab and then trim it to size. After laying out and drilling the dog holes (you'll have to use a hand drill and a guide block), the construction continues as described.

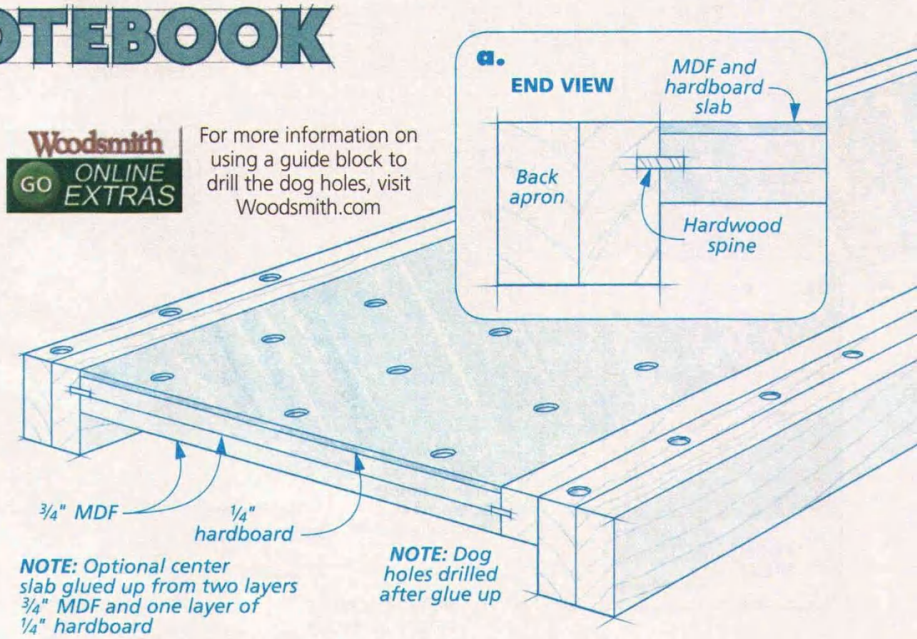

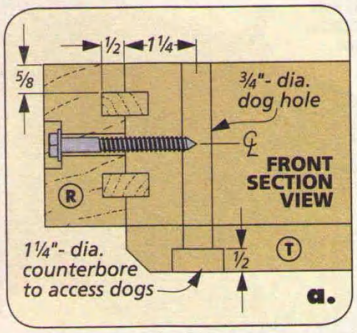

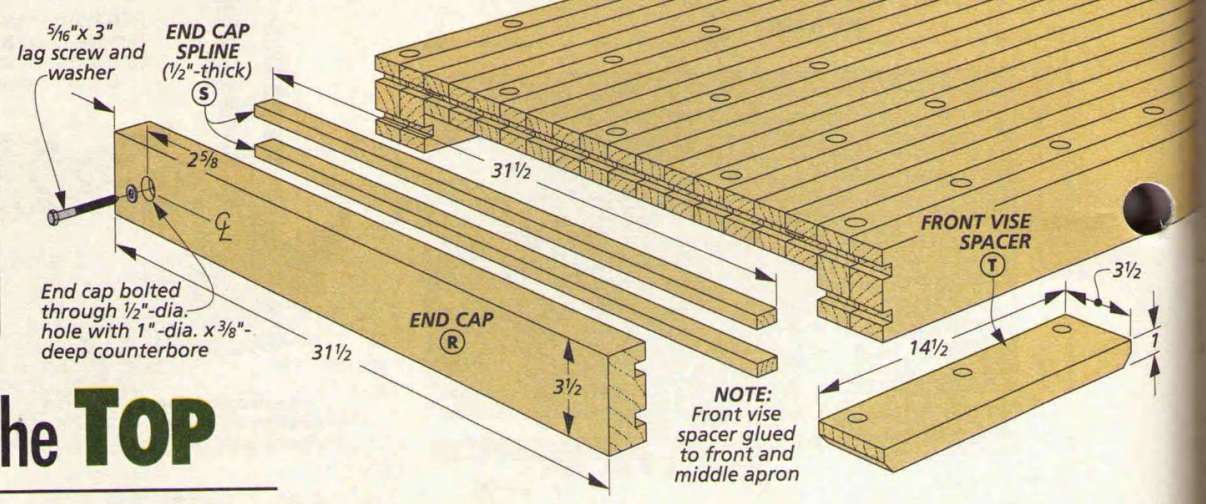

completing the TOP

Most of the hard work on the top is done. Now you're down to adding the end caps and the two vises.

END CAPS. The end caps close in the ends of the top and also help to keep it flat. But they have to be attached without being rigidly glued in place. The hardwood top will expand and contract across its width and the end caps need to accommodate this movement.

The solution is to attach each cap with a double spline, glue it at the front, but fasten it with lag screws through oversize holes at the back (detail 'a' above). This way, the caps will stay flush on the "vise" side, but the top is free to move.

SPLINE GROOVES. Once the caps are cut to size, you'll need to cut twin, 1/2"-wide grooves for the splines in the caps and the ends of the top (detail 'b' below). I didn't have a slot cutter this size so I cut the grooves by making several passes with a 1/4"-wide slot cutter.

Each slot is cut from the nearest face — top or bottom. And even though the lower slot only passes through the aprons, it was easier to cut a continuous slot in the caps.

Just one more thing. Since you're cutting the twin grooves from opposite sides, the width of the end caps needs to exactly match the full thickness of the top. Otherwise, the grooves in the cap may not align with the grooves in the top.

FINAL PREP. After cutting splines to fit the grooves, there are a couple more things to do before installing the end caps. The cap at the tail vise end needs some prep work for the installation of the vise later.

At this point, you're simply going to cut a notch through the end cap opposite the channel (detail 'a' below). This is the start of the "stepped mortise" that will hold the screw nut. A couple of passes across the dado blade are all it takes to cut this notch.

Finally, you can drill a counterbored bolt hole near the back end of each cap. Then they're ready to attach. Only the front 6" of the cap is glued. Once the cap is clamped in place, the bolt hole is continued into the top and a lag screw and washer installed.

SPACERS. One final detail and the top can be added to the base. Both vises require the addition of a spacer or support piece. You can check the drawings for details.

ATTACHING THE TOP. The top is now ready to be bolted to the base. (It's easier to mount the vises with the top in place.) I did this by installing

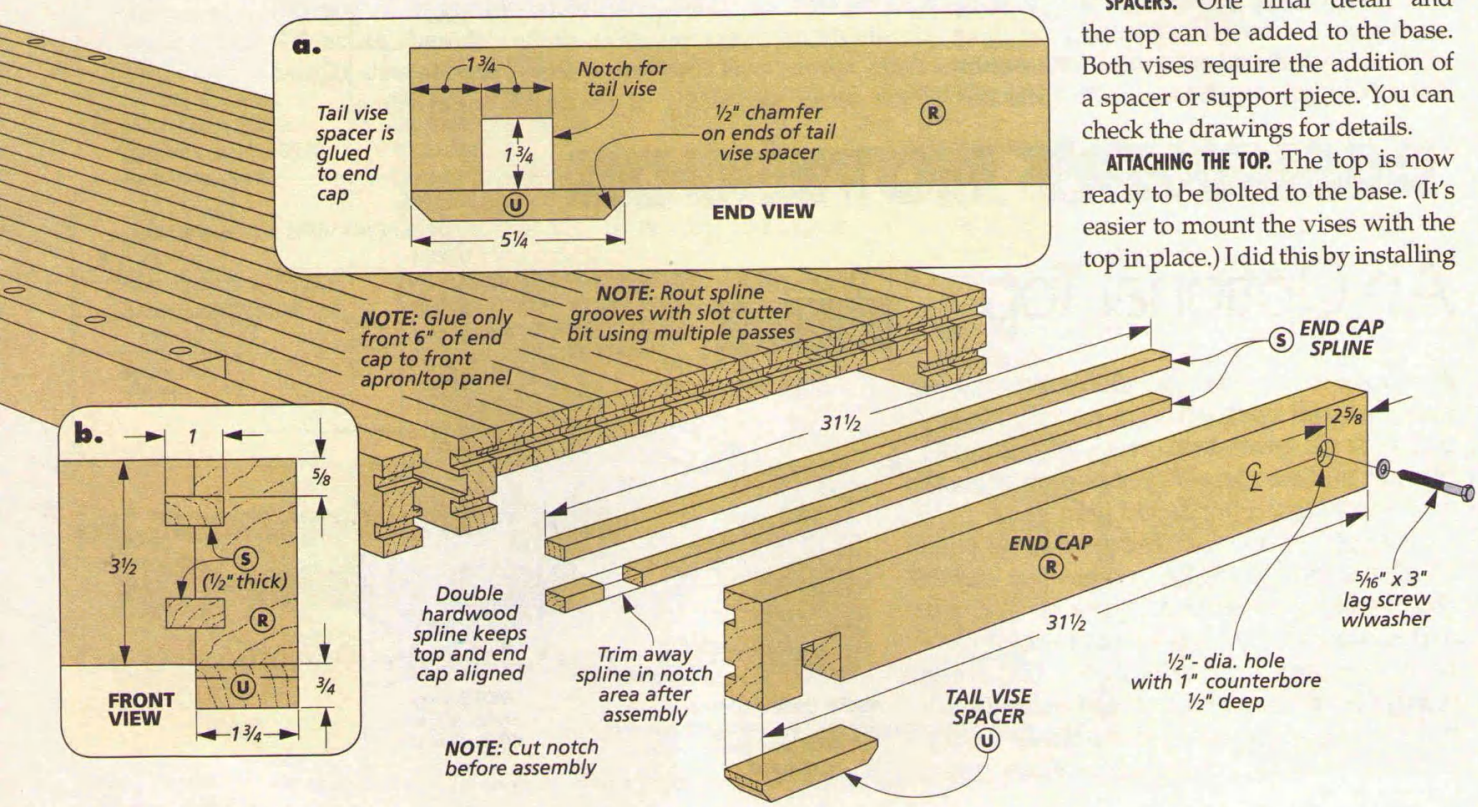

threaded inserts in the underside of the top and then using bolts through the support arms to pull the top and base together.

The bolt holes in the support arms have been taken care of, so you'll just need to install the inserts in the top. To locate the inserts in the top, I positioned the base on it, upside-down, as you see at right. Then, you can use the bolt holes to mark the location of the holes for the inserts. Once these holes were drilled and the inserts installed, I turned everything upright before bolting the top down.

The two vises and the finish of your choice will wrap things up. You'll find everything you need to know to install the front vise and the tail vise on the following pages. And for a few pointers on selecting the right finish for your workbench, check out the article on page 46.

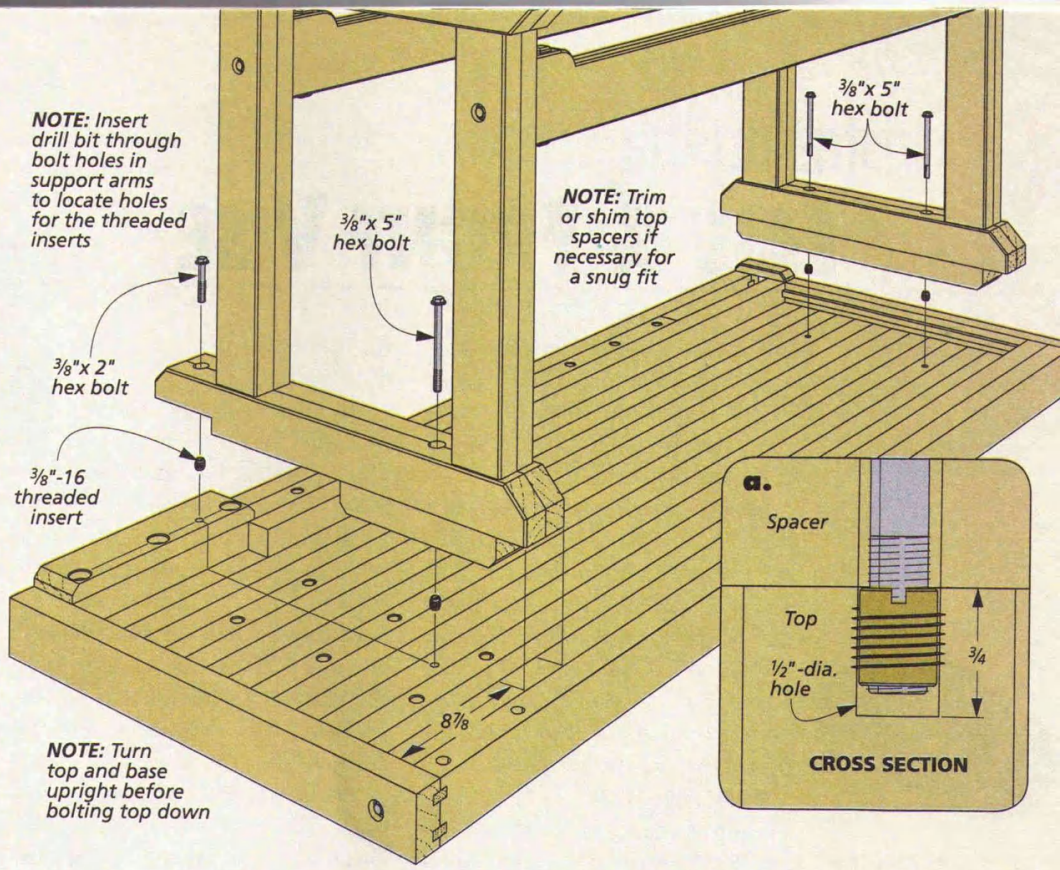

Materials, Supplies, & Cutting Diagram

A	Feet (2)	3 1/2 x 4 - 26 1/4
B	Long Support Arm (1)	3 1/2 x 3 - 29 1/2
C	Short Support Arm (1)	3 1/2 x 3 - 26 1/4
D	Legs (4)	3 x 3 1/2 - 30 3/4
E	Long Mounting Spacer (1)	1 3/4 x 3 1/2 - 22 1/4
F	Short Mounting Spacer (1)	1 3/4 x 3 1/2 - 11 1/2
G	Stretchers (2)	1 1/2 x 5 - 58 1/2
H	Stretcher Keys (2)	3/4 x 1 - 5 1/2
I	Shelf Boards (5)	3/4 x 3 1/4 - 56
J	Shelf Cleats (4)	3/4 x 1 1/4 - 15 3/4
K	Shelf End Caps (2)	3/4 x 1 3/4 - 17 1/4
L	Shelf Support Rails (2)	3/4 x 1 - 55 1/2
M	Top Slab Strips (13)	1 3/4 x 1 3/4 - 77 1/2
N	Inner/Outer Front Aprons (2)	1 3/4 x 3 1/2 - 77 1/2
O	Middle Front Apron (1)	1 3/4 x 3 1/2 - 63
P	Back Apron (2)	1 3/4 x 3 1/2 - 77 1/2
Q	Apron Splines (2)	1/4 x 15/16 - 77 1/2
R	End Caps (2)	1 3/4 x 3 1/2 - 31 1/2
S	End Cap Splines (4)	1/2 x 1 - 31 1/2
T	Front Vise Spacer (1)	1 x 3 1/2 - 14 1/2
U	Tail Vise Spacer (1)	3/4 x 1 3/4 - 5 1/4
V	Tail Vise Block (1)	1 3/4 x 3 1/2 - 6 1/2
W	Tail Vise Block Runners (2)	3/4 x 3/4 - 6 1/2
X	Front Vise Jaw Block (1)	3 1/2 x 5 - 18

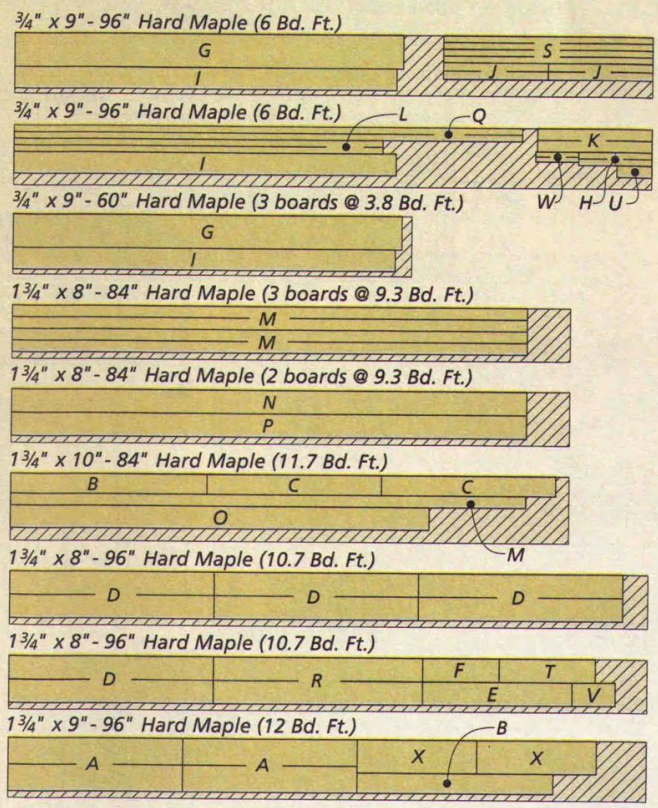

- (1) Large Front Vise w/Handle
- (1) Shoulder Vise Screw w/Handle
- (4) 3/4" x 4 3/8" Bench Dogs
- (4) 3/8"-16 x 6" Hex Bolts
- (3) 3/8"-16 x 5" Hex Bolts
- (1) 3/8"-16 x 2 1/2" Hex Bolt
- (1) 3/8"-16 x 2" Hex Bolt
- (4) 3/8"-16 Hex Nuts
- (5) 3/8"-16 Threaded Inserts
- (9) 3/8" Washers
- (2) 5/16" x 3" Lag Screws
- (2) 5/16" Washers
- (50) #8 x 1 1/4" Fh. Woodscrews
- (2) 1/2"-dia. x 2 3/8" Dowels
- (4) #8 x 2 1/2" Fh. Woodscrews

installing the TAIL & FRONT VISE

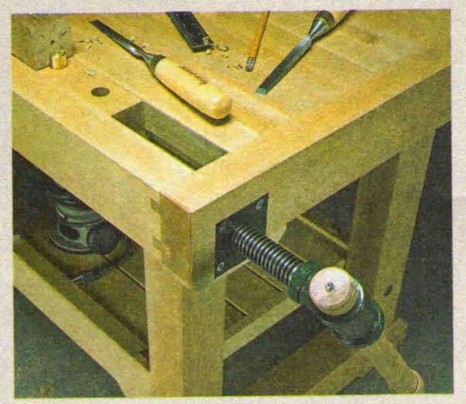

Installing the heavy-duty front vise and the built-in tail vise will finish up the bench. You already have a good start on the tail vise, so we'll complete this work first.

TAIL VISE. The tail vise consists of a heavy screw that passes through a nut mortised into the end cap. The screw is attached to a vise block that slides in the apron channel (detail 'a'). One note: The vise screw that I used is meant for use on a shoulder vise, but it was the best choice for my purposes.

MOUNT THE SCREW. I began by mounting the screw assembly. The stepped mortise in the end cap for the nut has been started, you'll just need to complete it by cutting the outer lip. Figure 1 shows you what to do. I used the nut to lay out the mortise, then chiseled out the waste. The nut should fit flush with the cap.

VISE BLOCK. After screwing the nut into the mortise, you're ready for the vise block. The tail vise block slides in its channel guided by runners that fit the grooves you cut in the apron pieces (detail 'b'). The problem of installing the block in the "closed" channel is solved by making it in pieces that are assembled in the channel. This also allows you to easily replace the block.

MAKING THE PARTS. First, take a look at the exploded view drawing and detail 'a' below to see how the vise block is put together. It's made up of an upper and lower half, and two runners. The runners are "pinched" between the two vise block halves. A threaded insert, bolt, and washer hold the pieces together, while a pair of aligning dowels keep the two halves from shifting under pressure.

The two halves of the vise block start out as a single piece. Once this piece is cut to size, you'll need to cut a ¾"-wide, centered groove along each side. When the block is split, the grooves will form the rabbets that capture the runners.

Before cutting the block in two, I drilled all the holes. First, you'll need to drill two, ¾"-dia. through holes to hold bench dogs. Then drill three identical holes — one near each end for the dowel pins and one in the center to hold the threaded insert and the bolt.

And then after cutting the block in two, you can make the runners. They should be sized to slide easily in the channel grooves.

THE FLANGE. With all the parts made, you can assemble the block in the channel to position the flange that holds the vise screw to the block. To make the flange fit, I had to trim off the wings and then drill a

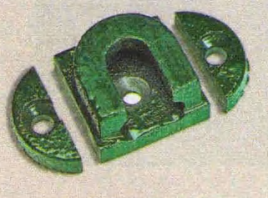

▲ I modified the tail vise flange by cutting off the wings and then drilling a new mounting hole in the center.

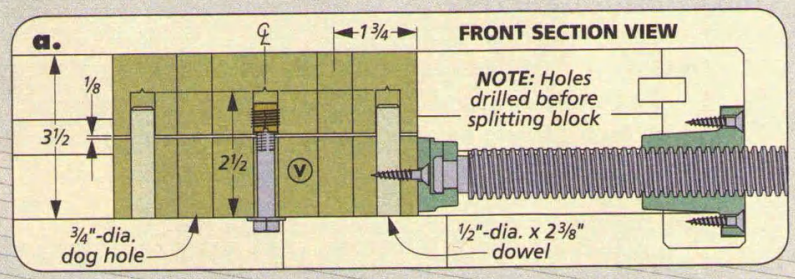

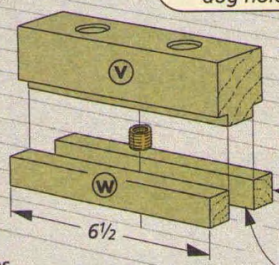

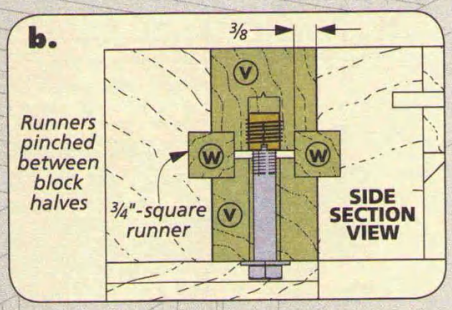

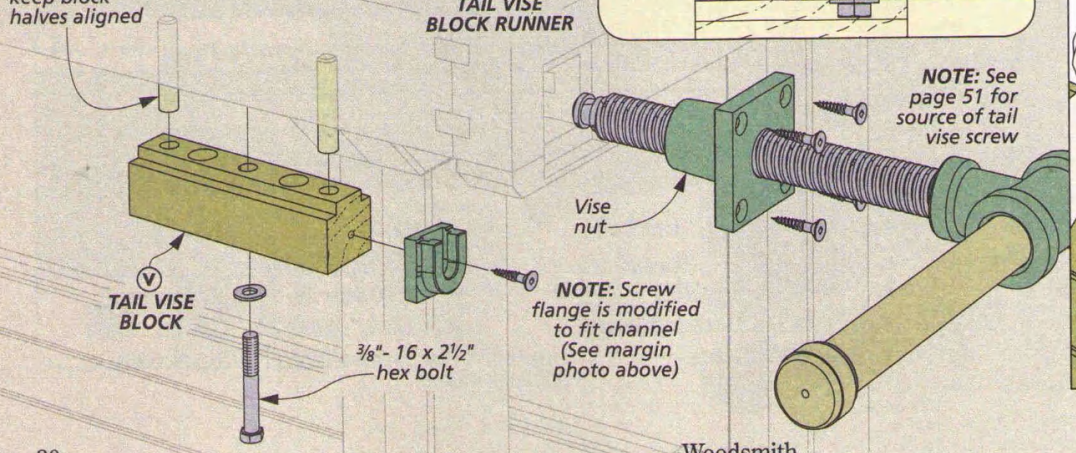

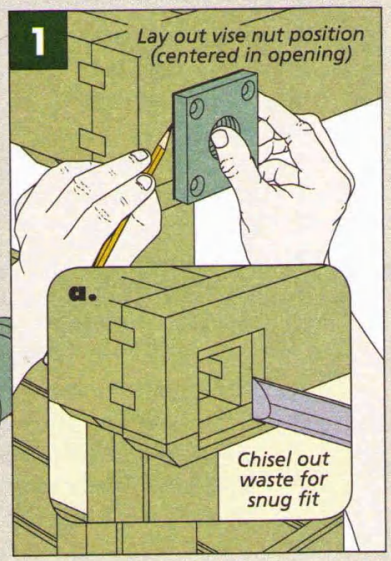

new countersunk mounting hole through the middle, as shown in the margin photo on the opposite page. You'll find that a hacksaw cuts through the flange easily.

With the modifications made, you can mate up the vise screw, the flange, and the vise block to mark the location for the mounting screw. After taking the block apart to drill the pilot hole, put it all together and your vise is ready to go.

THE FRONT VISE

Mounting the front vise is simpler. It comes with a drilling template and instructions, so I'll just give you a few general pointers.

JAW BLOCK. The only part you'll need to make is the large jaw block, as shown in the drawings below. The block is glued up from two pieces of 1¾"-thick stock. The inner piece has three dog holes spaced to align with those on the benchtop. These dog holes are counterbored on the underside to make pushing the dogs up through the wide block a little easier (detail 'a'). Lastly, I rounded the front corners at the band saw and then sanded them smooth (detail 'c').

MOUNTING. When the block is ready, you can get out the hardware and mounting instructions. There are only a few parts: a screw and guide rod assembly, a carriage plate, and a pair of support collars. A look at detail 'a' below will show you how it all fits together.

The key to mounting the vise is to make sure all the pieces are aligned properly. And if you do things in the right order and make use of the drilling template, your vise should operate smoothly.

THE HOLES. First, I used the template to drill the holes in the jaw block. (All the mounting holes are oversize to ease alignment.) Then I attached the template to the front apron to drill matching holes.

CARRIAGE. Now, you can use the screw assembly with the jaw block loosely in place to position and attach the carriage on the underside of the top. Placing the carriage snug against the front apron will give you maximum capacity. (You may have to shim the carriage to get it lined up right.) And once the carriage was screwed in place, I clamped the jaw block flush with the benchtop and the end and installed the mounting screws.

COLLARS. Installing the support collars is the final step. These are set into the apron, a hair below the surface. To mark the location of the mortises, I slid the collars over the guide rods and reinstalled the screw. Then, careful routing with a laminate trimmer created a snug mortise. (Another option is to simply drill a large diameter hole.)

A FINAL DETAIL. With the collars in place, I remounted the vise and again picked up my laminate trimmer to add the final detail. This time, I used it to rout a chamfer around the entire top (jaw block and all) and to chamfer the top edges of the dog holes. W

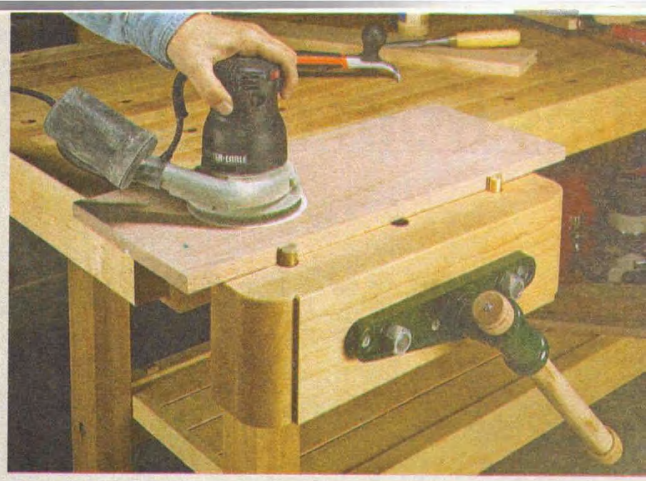

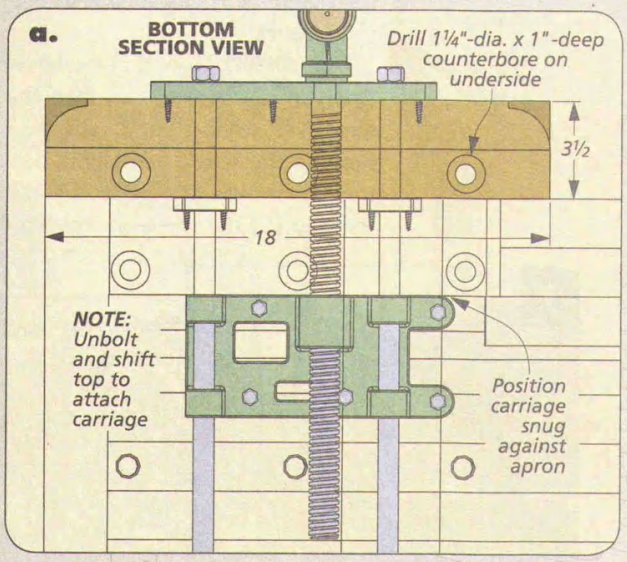

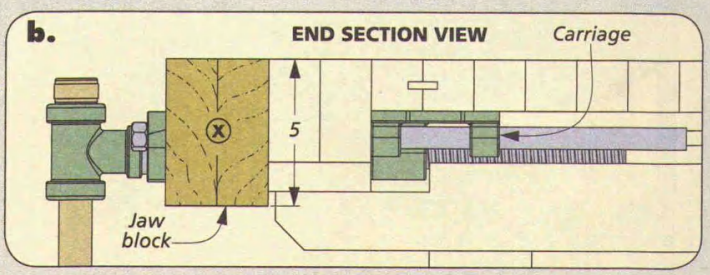

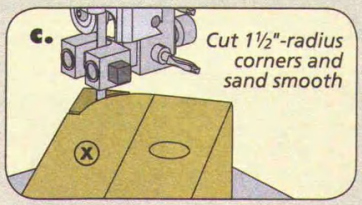

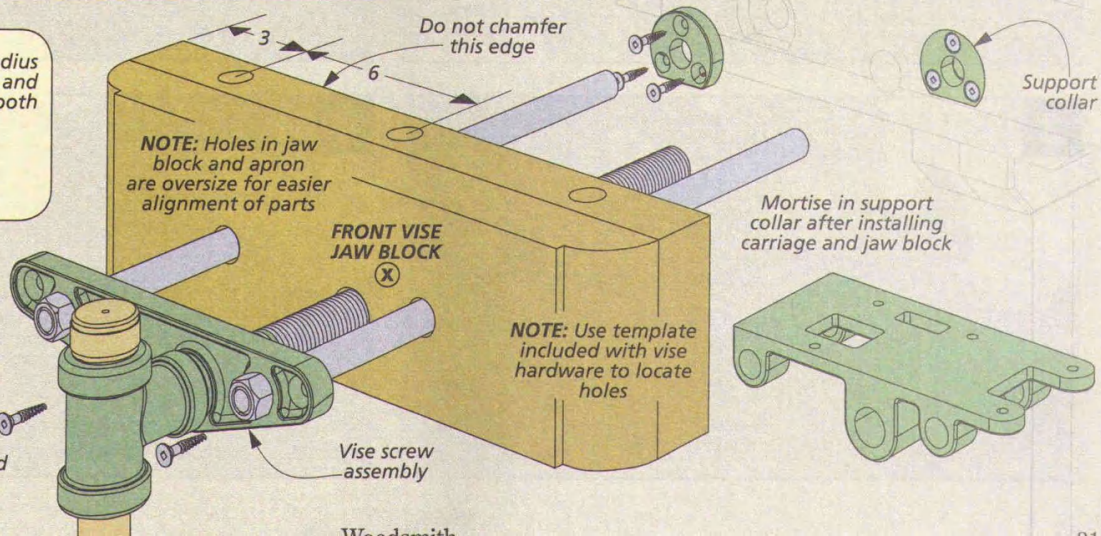

SHOP NOTEBOOK

The curved shoulders for the stretchers are cut on the band saw.

The cut out on the foot is started on the table saw and finished on the band saw.

Workbench Details

When it comes to cutting the feet and stretchers for the workbench on page 20, a few cuts on the table saw and band saw will get the workpieces in shape. Then it's just a matter of cleaning up the edges with the router.

BEVEL CUTS. The first step in making the foot is a bevel cut near each end of the workpiece. To do this, I tilted the saw blade to 45° and set the height at ½", as shown in Figure 1 below.

BAND SAW CUTS. Now that the bevel cuts are made, you can take the feet over to the band saw and remove the waste across the bottom, as shown in Figure 2. You'll want to cut the waste at a gentler curve away from the corners you just cut on the table saw. That way the saw blade won't bind. Once you've made the cut in one direction, turn the workpiece and cut out the waste on the other end.

SMOOTH THE EDGE. The final step is to clean up the rough-cut edges using a pattern bit in a router. To do this, you can clamp a straightedge along the layout line. Then using the straightedge to guide the pattern bit, make a pass stopping as close to the beveled corners as possible. Then flip the workpiece over, reattach the template and rout the remainder of the profile. Finally, clean up the corners with a chisel.

STRETCHERS. You can cut the entire profile for the stretchers at the band saw and then finish it in the same way as the feet, smoothing it with a pattern bit in the router.

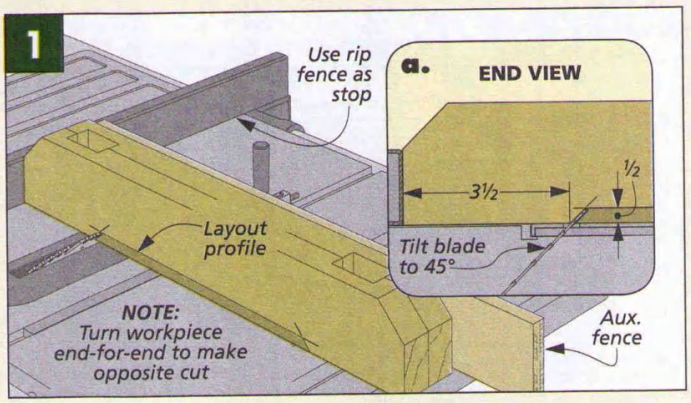

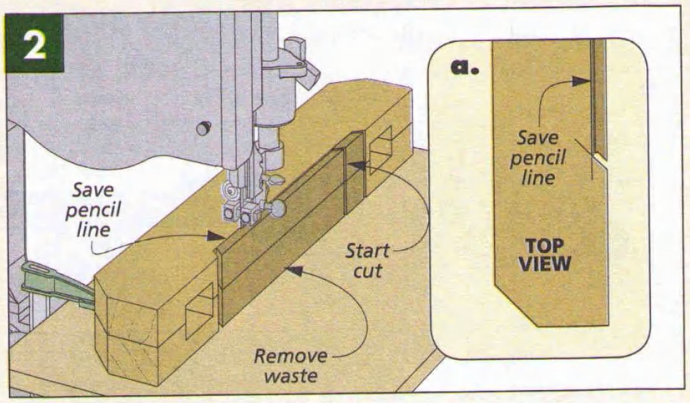

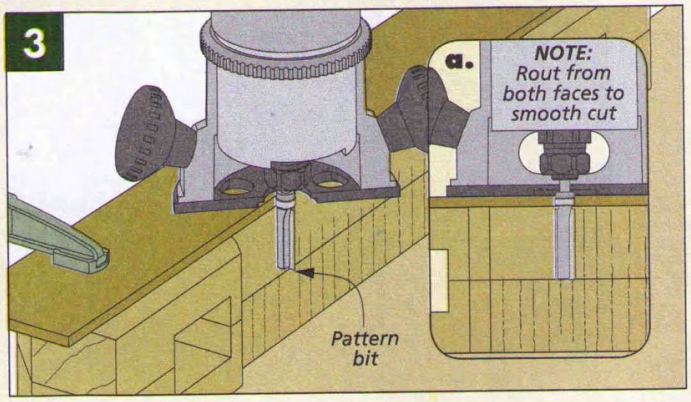

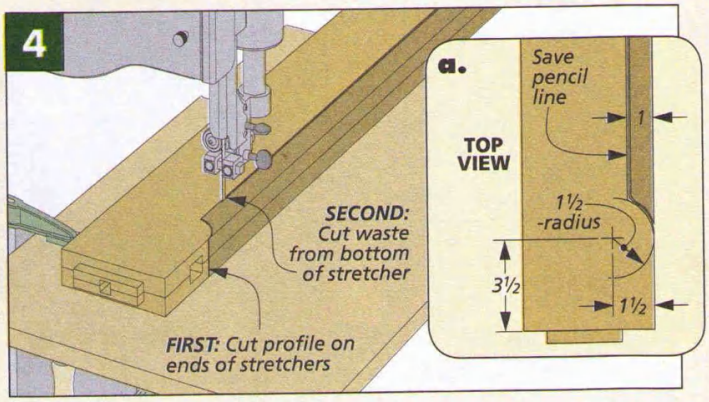

Routing Large Holes

Clean holes for the candle centerpiece on page 16 could be a challenge if you don't have a set of large-diameter Forstner bits. A good option is to make a template that allows you to rout the hole with a pattern bit in a handheld router, sizing the holes to fit the glass candleholders.

TEMPLATE. To make the template, cut a piece of hardboard the size of the base and mark the centers of the holes according to the plan. After you have the holes laid out, you can take the piece over to the drill press to cut the holes with a circle cutter.

ROUTING THE BASE. Once the holes are cut in the template, you can attach it to the base using a few pieces of carpet tape in the corners. Now you're ready to cut the holes with a router. I used a pattern bit with a short cutting length so that I could take small amounts of material with each pass around the template.

Start routing in the middle of the holes and keep making wider sweeps until you reach the edge of the template holes. Then remove the template and lower the bit about a ¼" after each pass until you've routed out all the waste material and are left with smooth holes for the candleholders and at least a ¼" of material in the bottom of the holes to support them.

If the holders are tapered, be sure to use the upper measurement for the holes.

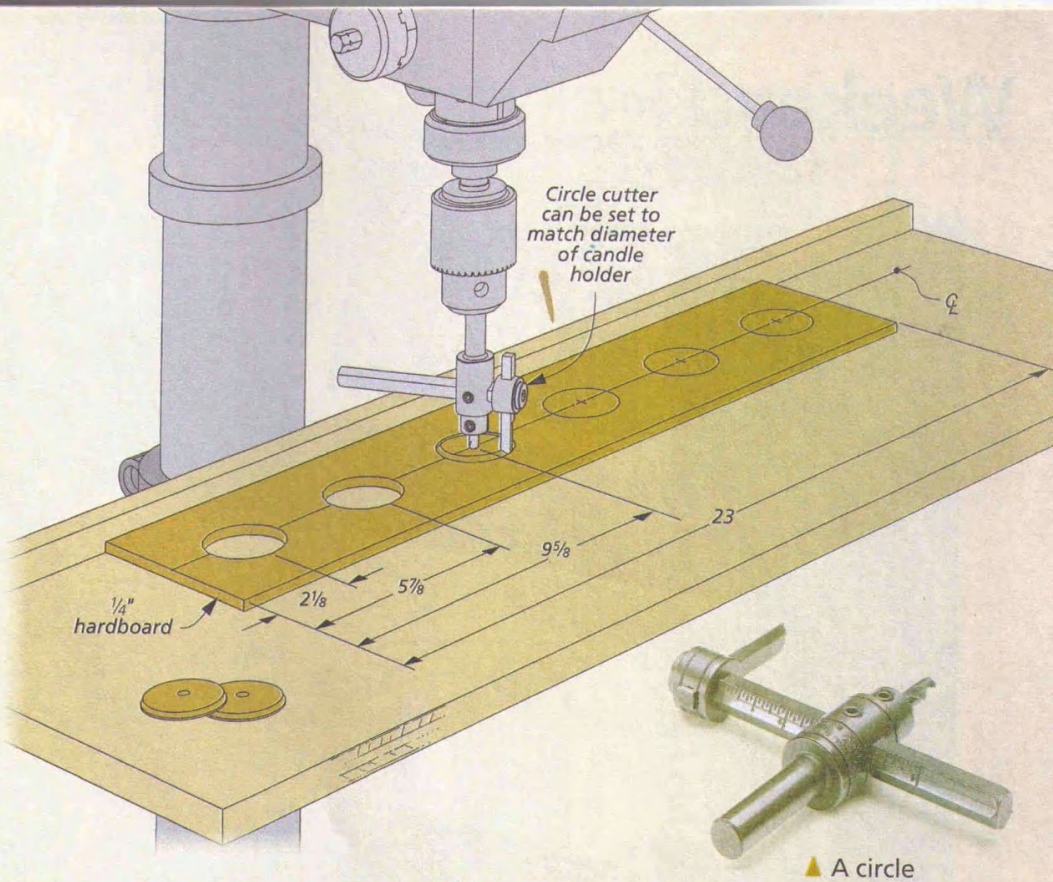

▲ A circle cutter lets you cut any size hole.

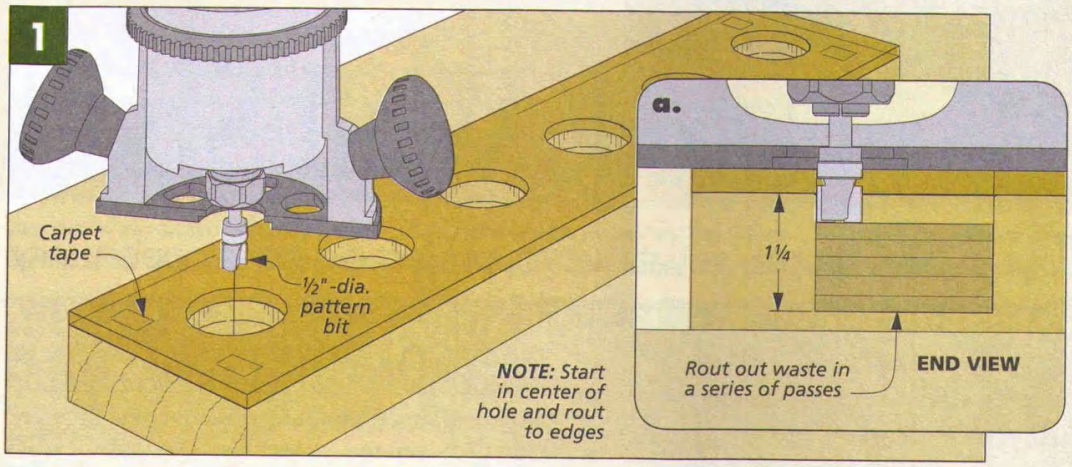

▲ A pattern bit with a ½" cutting depth will take less material with each pass of the router.

Attaching Fretwork to a Shelf

When it came time to nail the fretwork in place for the shelf on page 34, I was worried about splitting the delicate scroll work. The solution is to predrill the brad holes.

Once the fretwork was cut, I drilled a hole through it the same size as the head of the brad I was going to use. Check the brad with a drill gauge to determine the correct size drill bit to use. Just be sure to drill the hole at a slight angle so the opposing brads won't hit each other.

After the holes are drilled, you can glue the fretwork on the shelf and tap the brads in place with a nail set.

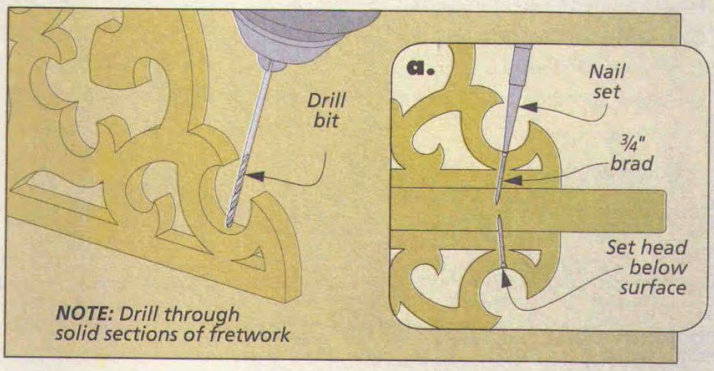

fretwork Wall Shelf

This simple, yet attractive, project is a great opportunity to spend some time building your skills at the scroll saw.

Materials, Supplies, & Cutting Diagram

A Frame Rails (2)	3/4 x 1 - 18 3/4	**G** Small Fretwork Panel (8)	1/4 x 4 1/8 - 4
B Frame Stiles (2)	3/4 x 7/8 - 6 1/2	**H** Large Fretwork Panel (2)	1/4 x 4 1/8 - 8
C Top/Btm. Mirror Stops (2)	1/4 x 1/4 -17 1/2	• (1) 6 3/8" x 17 3/8" Beveled Mirror	
D Side Mirror Stops (2)	1/4 x 1/4 - 6	• (2) Keyhole Hangers	
E Shelves (2)	1/2 x 5 1/2 - 20	• (4) #8 x 1 1/2" Fh Woodscrews	
F Uprights (2)	3/4 x 3/4 - 17	• (20) 18-ga. x 3/4" Brads	

3/4" x 4 1/2" - 60" Mahogany (1.88 Bd. Ft.)

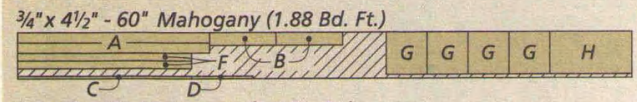

1/2" x 6" - 48" Mahogany (2.0 Sq. Ft.)

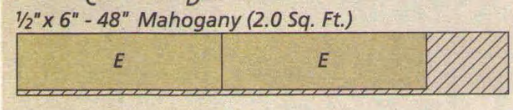

***NOTE:** Parts C, D, G and H are resawn and planed to 1/4" thickness*

Sometimes, it's nice to take a break from the typical woodworking routine and do something different. And this scroll saw project does just that.

The intricate cuts and change of pace can be very relaxing. But, you also want to end up with something you can be proud of — something a little out of the ordinary that can be displayed.

The shelf you see here fits the bill in every way. It's simply a mirrored frame wrapped with a pair of shelves and uprights.

Of course, what really makes this project stand out is the fretwork. It may look daunting at first, but you'll find out that cutting fretwork doesn't take much time, and it's simple to create decorative motifs. The procedure and patterns used for making it are shown on page 37.

building the FRAME

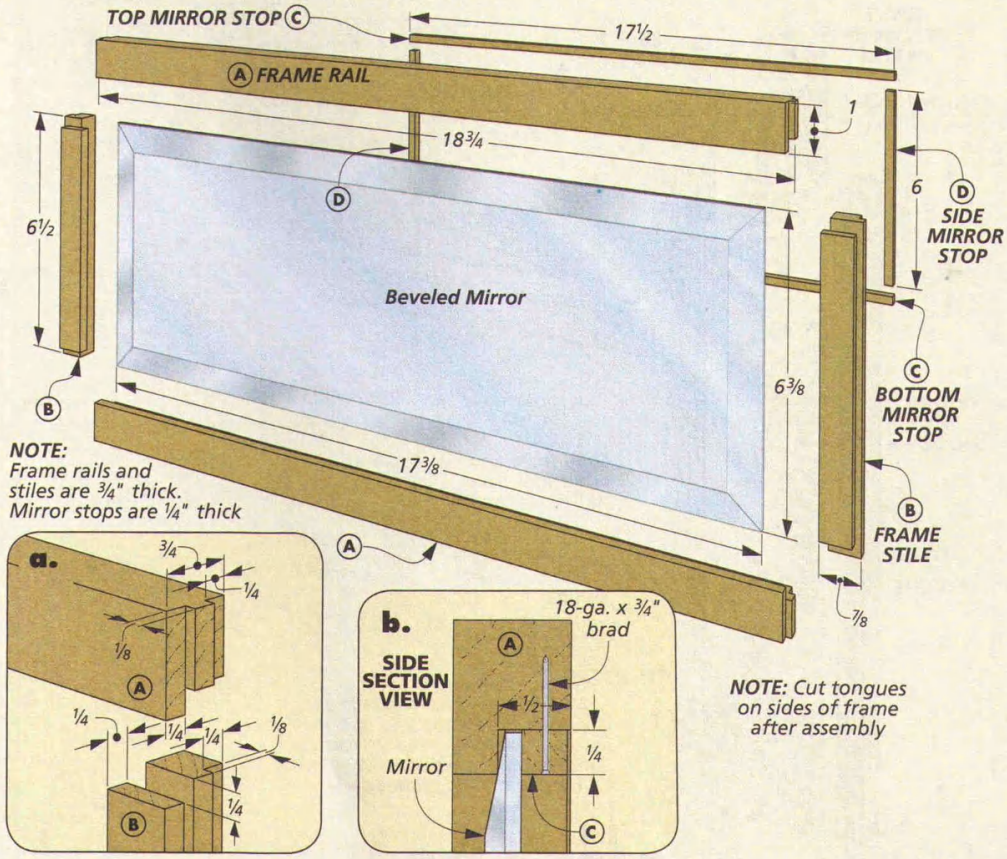

I began building this wall shelf by starting at the center — the mirrored frame — and working my way out. As the main drawing shows, it's a beveled mirror surrounded by a simple rail-and-stile frame. And I've found it's easier to add the shelf to the mirror (or frame) than it is to fit the frame into an already-built shelf.

It's also a good idea to have the mirror on hand before starting. Then you can size the parts so they fit around the mirror with just a slight (1/16") gap.

THE FRAME. Building the frame is fairly easy. If you look closely at detail 'a,' you'll notice notches, rabbets, and stub tenon and groove joinery. It may look complicated at first, but don't worry. The box below shows the step-by-step method I used to make these cuts. But there are a couple of details I'd like to mention about the process.

SETTING UP. After cutting the frame pieces to size, you can set up your table saw to cut the rabbets that will hold the mirror (detail 'b'). To cut these, I buried a dado blade in an auxiliary fence attached to the saw's rip fence. This protects the rip fence from the blade when you have the two so close together. And it also allows you to tweak the width of the cut by adjusting the fence, rather than the dado blade.

NOTCHES. The next step is to create notches in the stiles to fit the rabbets in the rails (see detail 'a'). When that's done, glue and clamp the frame together, then compare the diagonal measurements. When they match, the frame is square.

TONGUES. Once the glue dries, you can cut the tongues along the sides of the frame. These tongues will fit into grooves in the uprights that you'll cut later on. It's easier to cut these tongues after the frame is built than to cut tongues in the individual pieces and try to line them all up later.

One last point: The drawing above shows how the mirror is held in place with stops. To prevent damage to the mirror while you're working with the other parts of the shelf, it's a good idea to install the mirror after the rest of the shelf is assembled.

How-To: Frame Joinery

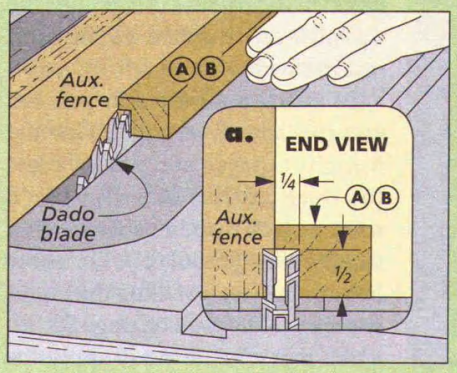

First, Rabbets. *Once the auxiliary fence is in place, cut the rabbets that will hold the mirror in the frame rails and stiles.*

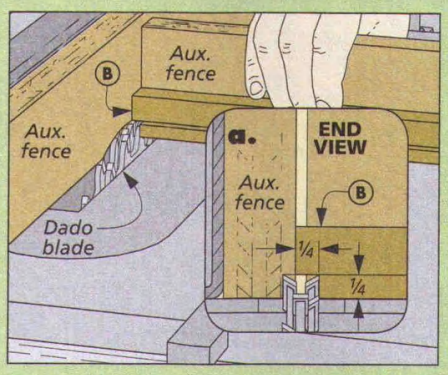

Second, Notches. *Adjust the dado blade and fence to cut notches in the ends of the stiles to hold the rails.*

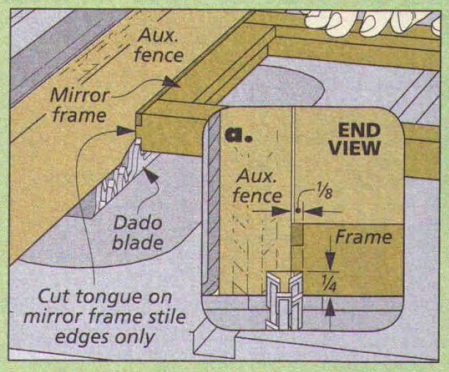

Third, Tongues. *Cutting the tongues after the frame is built ensures alignment and consistency in the finished cut.*

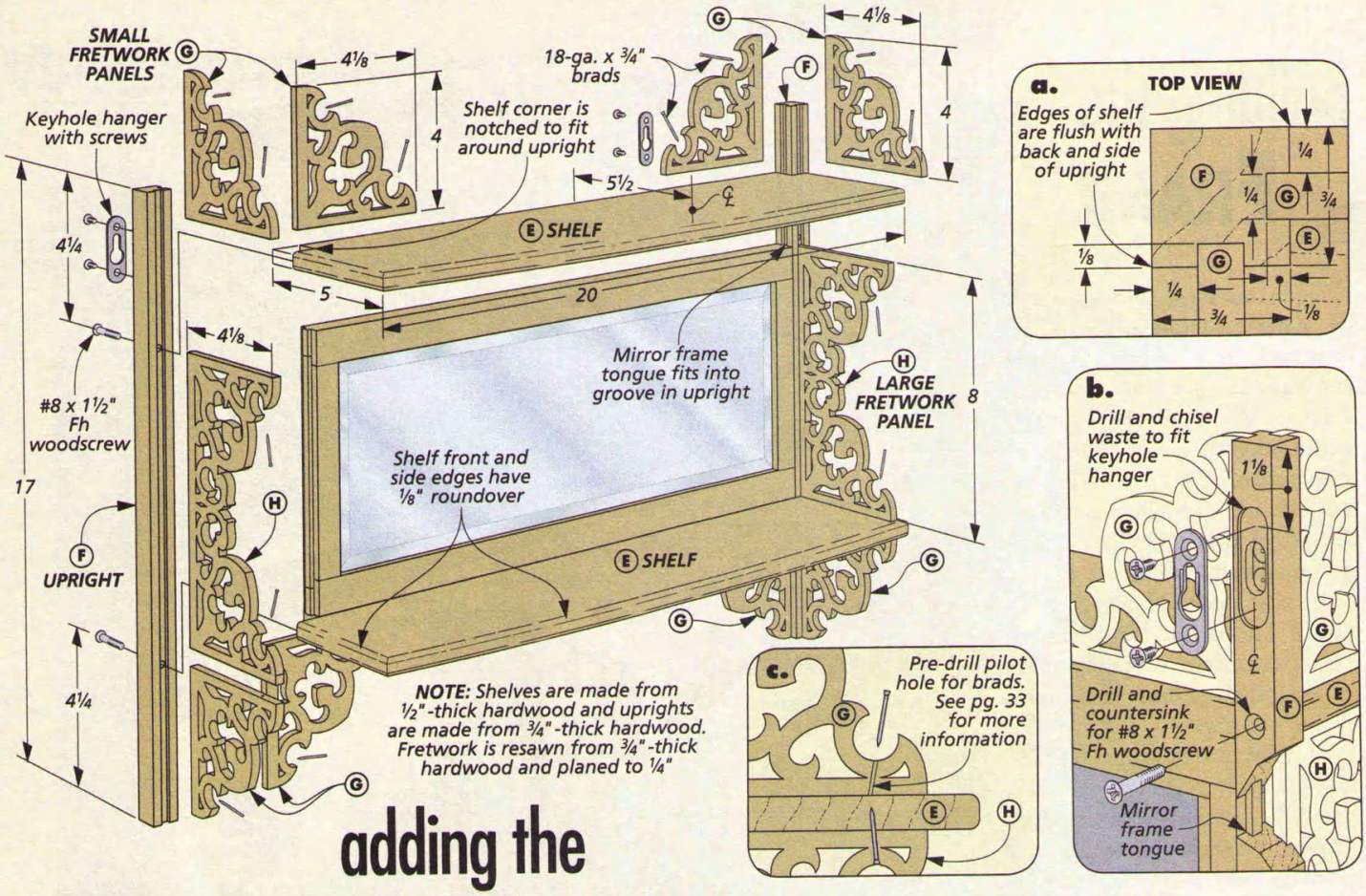

adding the SHELVES & FRETWORK

With the frame complete, you can focus on adding the uprights, shelves, and the fretwork.

THE UPRIGHTS. Each upright has a pair of grooves in the front and inside edges, as you can see in detail 'a' above. The mirrored frame will fit in the inside grooves, while the fretwork will fill in the rest of the grooves.

Next, you can drill holes for the screws that will attach the shelves and make mortises for the keyhole hangers (detail 'b'). You'll find a detailed procedure for installing keyhole hangers in *Woodsmith* No. 172, page 33. Then, you can start making the shelves.

THE SHELVES. The box below shows how I shaped the shelves. Each shelf is notched to hold the uprights. Then, after cutting a gentle curve into the front edge of the shelves, I rounded over all the edges.

THE FRETWORK. With the main pieces of the wall shelf completed, you can move on to the fretwork. For more details on cutting the fretwork, see the following page.

ASSEMBLY. Since the mirrored frame determines where the other pieces go, you'll want to center it on the uprights first. Next, the shelves are glued to the frame. And, finally, the uprights are attached to the shelf notches with screws.

To attach the fretwork, you can just run a bead of glue inside the upright grooves and gently press the fretwork in place. But you'll need to tack it to the shelves with small brads (detail 'c'). For more information on installing the brads, see Shop Notebook on page 32.

All that's left to do is apply the brown mahogany stain and lacquer finish, install the mirror, and hang the shelf in your home. W

How-To: Shelf Details

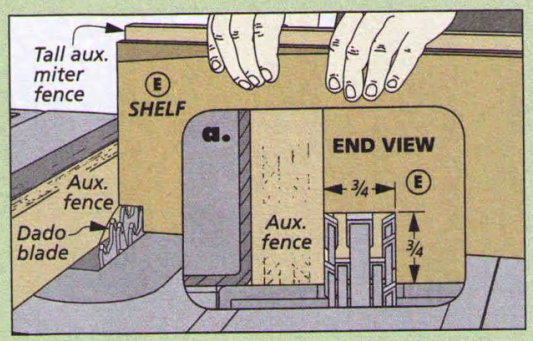

Cutting the Shelf Notches. *A tall auxiliary fence attached to the miter gauge will support the shelves while cutting the corner notches.*

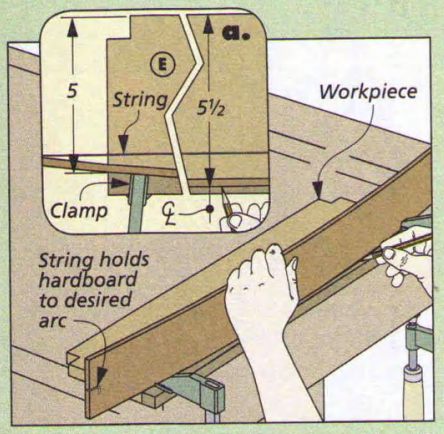

Marking the Curve. *Using a "bow" made from a piece of hardboard and string, trace a curve on each shelf.*

How-To: Cut Fretwork

The fretwork adds the perfect touch to this wall shelf. But before you sit down at your scroll saw, there's a little preparation to be done.

PREPARING THE WORKPIECES. The first step is to size the workpieces. Instead of planing thick stock down to ¼", I decided to resaw the stock to the proper thickness. After planing the resawn stock smooth, I cut the pieces to finished size and mounted copies of the patterns you see on the far right to the blanks with spray adhesive.

PREPARING THE SCROLL SAW. Now that the workpieces are ready, make sure your scroll saw is too. First, it's important to have the right blade. For fretwork, I generally use a No. 5 reverse tooth blade and tension it so it will only flex ⅛" under finger pressure. Then square the table to the blade.

Now you're ready to cut the fretwork. But the place to start is actually at the drill press.

STARTER HOLES. Because the fretwork involves mostly inside cuts, drilling starter holes will allow you to feed the blade through the workpiece to make those cuts.

With fretwork, what takes getting used to is rotating the panel as you work. To make this easier, I drill holes near sharp turns (Fig. 1). It's easier to rotate the workpiece inside a hole than in a kerf.

MAKING THE CUTS. After the holes are drilled, you can begin cutting. There's no set sequence, but I like to make the smaller cuts first. Cutting out the large areas first can weaken the workpiece and may cause it to break when cutting the smaller areas.

REMOVING WASTE. It's easier to remove the waste in small pieces, rather than all at once. For example, I'll cut sharp corners in two or three steps (Fig. 3). For other corners, the trick when rotating the panel is to push the workpiece against the sides and back of the blade (the edges that don't cut.)

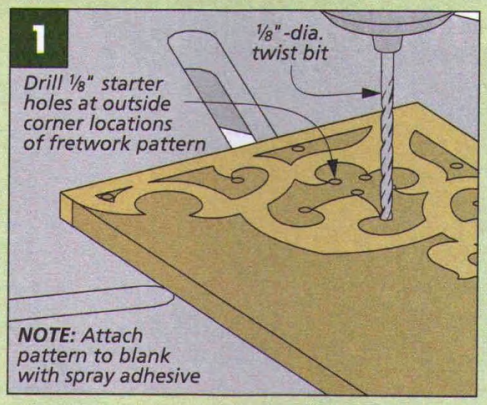

Starter Holes. *After mounting the pattern on the workpiece, drill starter holes to feed the scroll saw blade through.*

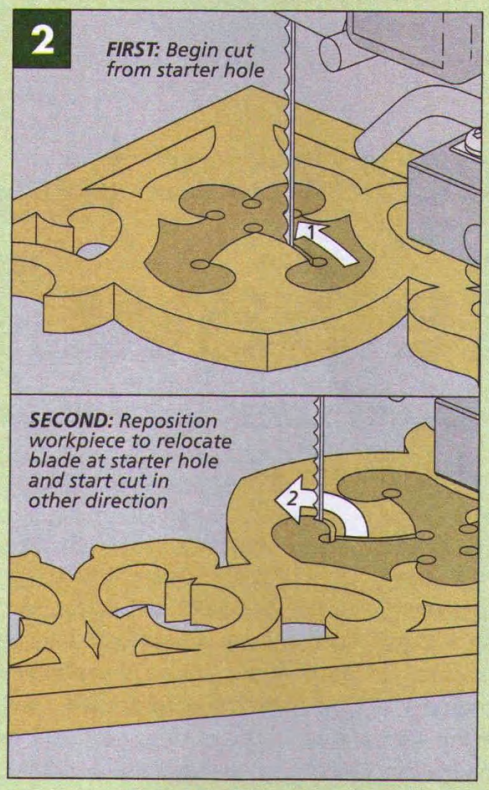

Connect the Holes. *By drilling holes at turning points, it's easier to rotate the workpiece and stay close to the layout lines.*

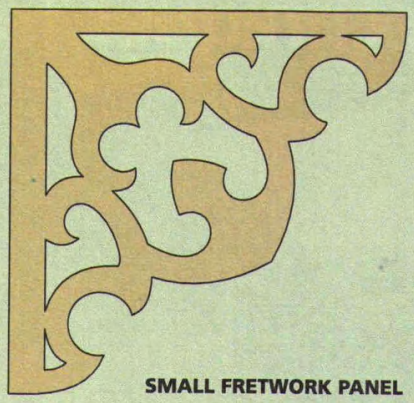

SMALL FRETWORK PANEL

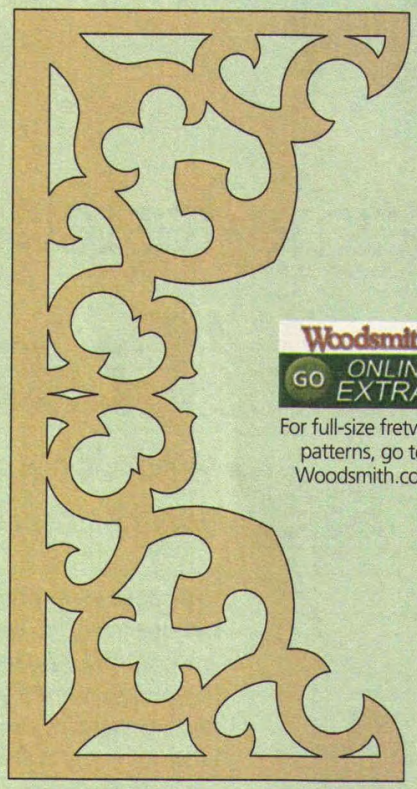

LARGE FRETWORK PANEL

Woodsmith GO ONLINE EXTRAS

For full-size fretwork patterns, go to: Woodsmith.com

FRETWORK PATTERNS. *Enlarge the patterns 200% and attach them to the workpieces with spray adhesive.*

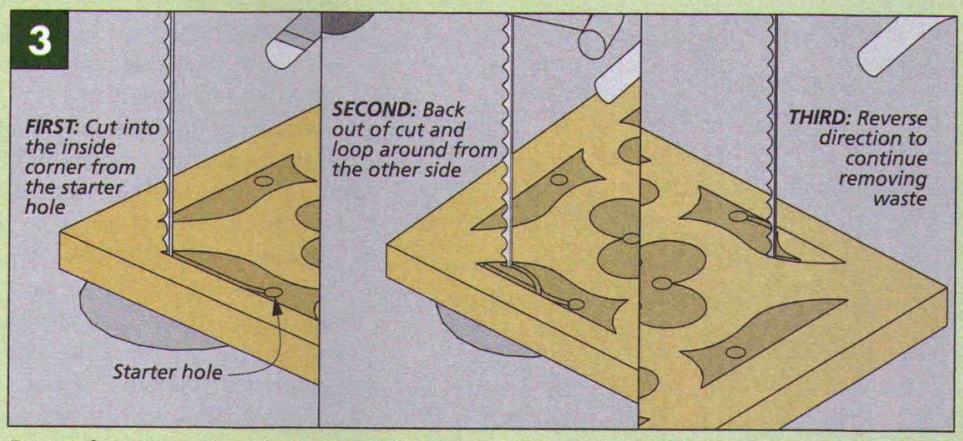

Removing Waste. *With intricate designs, it's much simpler to cut away the waste in small pieces, rather than one large cut. Making several cuts from different directions in the pattern will leave sharp, crisp corners and edges.*

time-tested techniques for

Table Saw Tenons

When it comes to cutting clean, accurate tenons, the table saw is the tool of choice. The bonus is there are two easy ways to do the job.

The mortise and tenon has to be near the top of the list for the title of "most useful woodworking joint." Its combination of gluing surface and mechanical strength makes it ideal for many types of projects.

The upshot is that I use this joint often enough to have the routine down pretty well. I cut my mortises first, followed by the tenon. This means that cutting a tenon that fits snugly into the mortise is the "make it or break it" part of the job.

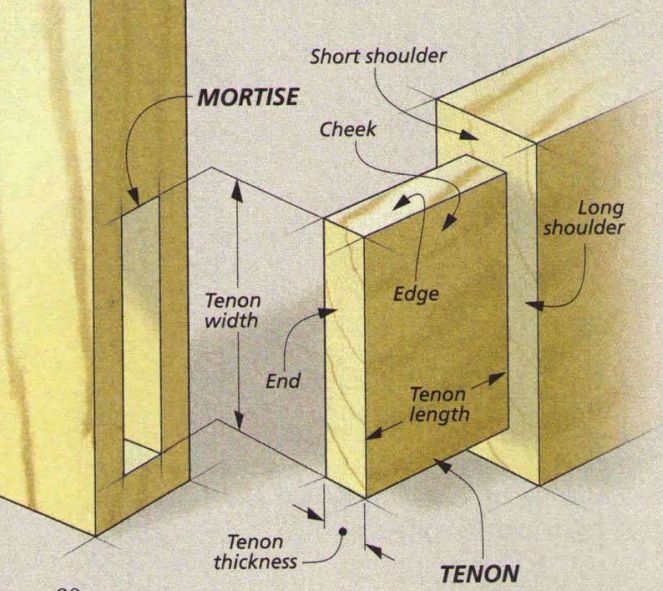

TWO TECHNIQUES. But cutting accurate tenons doesn't need to be a challenging trial. There are a couple of pretty foolproof ways to cut clean, snug-fitting, perfectly centered tenons on the table saw.

The difference between the two techniques basically boils down to one thing — the type of saw blade used to do the job. One method uses a stack dado blade installed in the saw, while the other simply employs a standard blade.

Naturally, the question arises, which works the best and which should I use? Well, the standard blade method can give you smoother, cleaner cheeks, when that's a necessity. While using a dado blade requires a simpler setup and can be quicker. Once you're familiar with both techniques, you can choose the one that works best for you and the job at hand.

THE JARGON. When talking about making tenons, it's helpful to have all the names and descriptions straight. You'll find that there are different types, sizes, and shapes of tenons, but a few common terms apply to all of them. A quick look at the drawing at left will familiarize you with the basics.

THREE GOALS. When I cut tenons, I keep three goals in mind: First, the shoulders should be cleanly cut, perfectly straight, and square to the faces and edges. This creates a seamless fit to the mortised piece.

Second, the tenon needs to be accurately sized for a snug fit in its mortise. The correct thickness, width, and length all play a part in making a strong joint.

Finally, the cheeks that provide the gluing strength need to be reasonably smooth. The good news is that either of these methods will fill the bill completely.

As mentioned, the technique for cutting tenons with a dado blade is a little simpler, so I'll start with it. Then the following pages will cover the standard blade method.

Dado Blade Tenons

The advantage to using a dado blade to cut tenons is that the job goes quickly. A wide dado blade allows you to make the shoulder cuts and remove the waste from the cheeks in just a few passes. So this method is my first choice when I have a lot of tenons to cut.

THE SETUP. The table saw setup is pretty straightforward. A look at Figure 1 gives you the idea. A wide dado blade is installed in the saw along with a zero-clearance insert. An auxiliary fence is attached to the miter gauge to feed the workpiece and back up the cut. And the rip fence is used as a stop to gauge the length of the tenon.

ADJUSTMENTS. With the basics in place on the saw, the cheeks and long shoulders are up first for attention. And the first step is to adjust the blade height. This sets the thickness of the tenon.

To do this, I use one of my workpieces as a test piece. Set the blade a little low, and then make a cut across the tip of the workpiece on each side. After comparing this "stub tenon" to the mortise, raise the blade and repeat the process until the corner of the test tenon will slide snugly into the mortise.

The same cut-and-test process is used to accurately position the rip fence. Start "short" and make a full cut just shy of the shoulder line. Then you can readjust the fence to sneak up on the layout line.

THE CHEEK CUTS. Now you're through with the hard part. The cheek cuts will go quickly. Start with a cut at the shoulder line, as shown in Figure 1. Just concentrate on keeping the workpiece square to the blade, snug to the rip fence, and tight against the table. Then remove the remaining waste by working back toward the tenon's end (Figure 2).

You'll probably notice small ridges and score marks on the cheek left by the cuts. But there's an easy way to clean these up — a series of side-to-side passes across the dado blade, as shown in Figure 3. Then flip the workpiece over, and do it all again on the opposite side.

SHORT SHOULDERS. At this point, you've established the length and thickness. Cutting the short shoulders and edges will bring your tenon to its final width.

You may have to readjust the height of the blade, but the rip fence stays put. As you see in Figure 4, the workpiece is held on edge against the auxiliary miter gauge fence, but notice that the first cut is at the end of the tenon instead of the shoulder. This prevents splintering at the corner between the edge and cheek.

Now, nibble back toward the shoulder and finish up with a light cut (Figure 5). You want to avoid pushing too hard against the rip fence and possibly scoring or chipping the long shoulders. And after cutting the second short shoulder, the tenon is ready for its mortise.

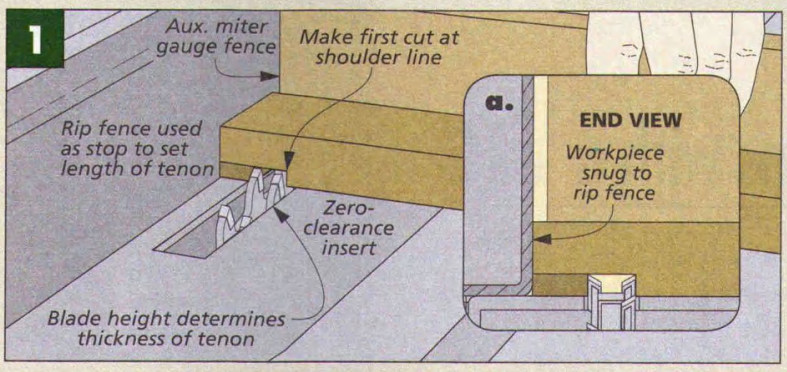

First Cut. *Start with a cheek cut along the shoulder line. Concentrate on keeping the workpiece flat on the table and tight to the fence.*

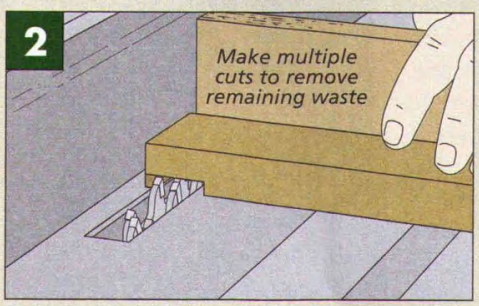

Nibble Waste. *Once the shoulder cut is made, you can start to nibble away the waste working back toward the end of the tenon.*

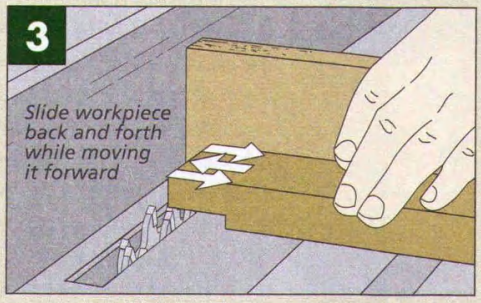

Back and Forth. *Clean up any ridges or scoring on the cheek by sliding it back and forth across the dado blade.*

Woodsmith GO ONLINE EXTRAS

To view a video demonstration of the two techniques discussed in the article, visit our website at Woodsmith.com.

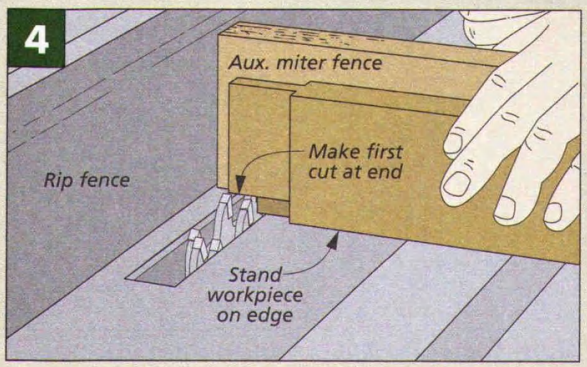

End First. *To avoid chipout at the corners, the edges and short shoulders are cut starting at the end.*

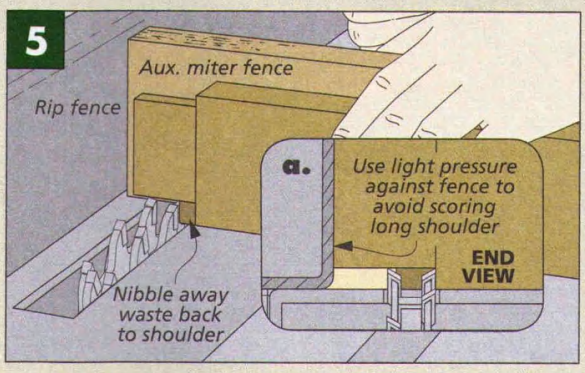

Shoulder Last. *Complete the tenon edge by making a careful cut along the short shoulder.*

tenons with a JIG

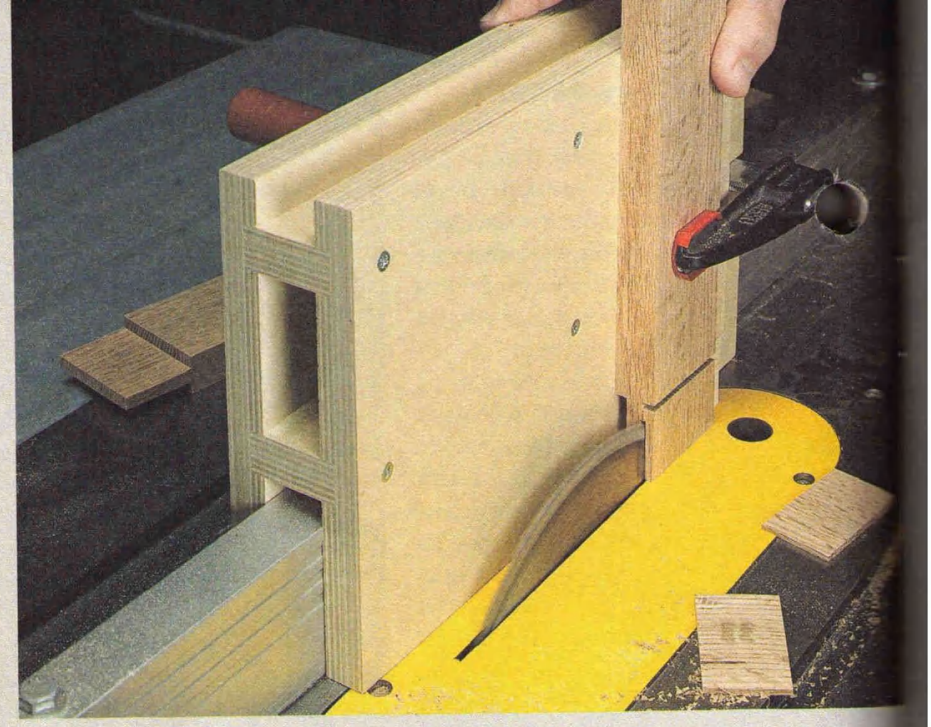

When you need to cut a tenon with perfectly smooth cheeks (for example when making a bridle joint), the standard blade method is the answer. This technique separates the shoulder cuts and the cheek cuts into two operations.

First, the shoulders are cut with the workpiece flat on the saw table. Then, the workpiece is held upright in a tenoning jig to remove the waste from the cheeks (right photo). The jig makes control of the workpiece easier and results in more accurate cuts. I'll talk a little more about the tenoning jig when it's time to use it for the cheek cuts.

SHOULDERS FIRST

As I mentioned, the shoulder cuts come first. And there's a good reason for doing things in this order. The length of the tenon is determined by the shoulder cuts, and this dimension can easily be measured as the saw is set up and the cuts are being made. But to accurately judge the correct thickness of the tenon, you need to compare it to the mortise. You can only do this after the waste has been removed with both the shoulder cuts and the following cheek cuts.

THE SHOULDER SETUP. The table saw setup used to make the shoulder cuts (long shoulders first) mirrors the setup used for the dado blade method, as you can see in Figure 1. The miter gauge with auxiliary fence attached and rip fence serve the same purpose as before. The difference, of course, is that you'll have a standard blade on the saw. (A combination blade works best.)

ADJUSTMENTS. Again, both the height of the blade and the position of the rip fence need to be set. Here, the blade height isn't quite as critical since the following cheek cuts determine the final thickness of the tenon. I simply sneak up on correct height with test cuts across the tip of the tenon.

Once the height of the blade is in the ballpark, you can zero in on the rip fence setting. This determines the length of the tenon, so here you want to be dead-on accurate.

THE CUTS. When the adjustments are completed, it's just one quick cut across each face (Figure 1). Keeping the workpiece snug and square to the fence and flat on the table is all you need to focus on.

SHORT SHOULDERS. The short shoulders can be cut with the same setup and in the same manner (Figure 2). But you may have to change the blade height before standing the piece on edge for the single cut. Again the key is to avoid cutting into the clean, long shoulders. Just don't force the workpiece too firmly against the fence, and this shouldn't be a problem.

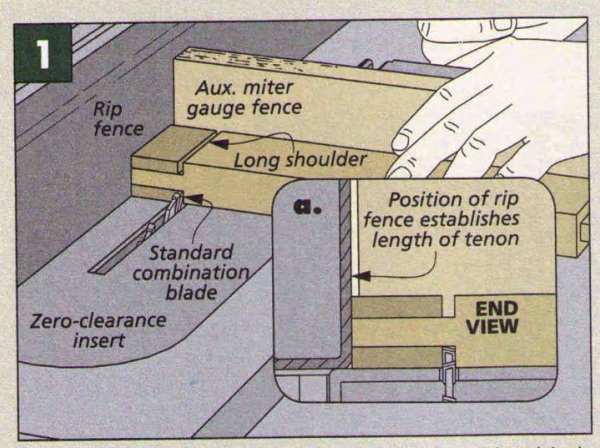

First, Long Shoulders. *After adjusting the blade height and the position of the rip fence, a cut across each face establishes the long shoulders.*

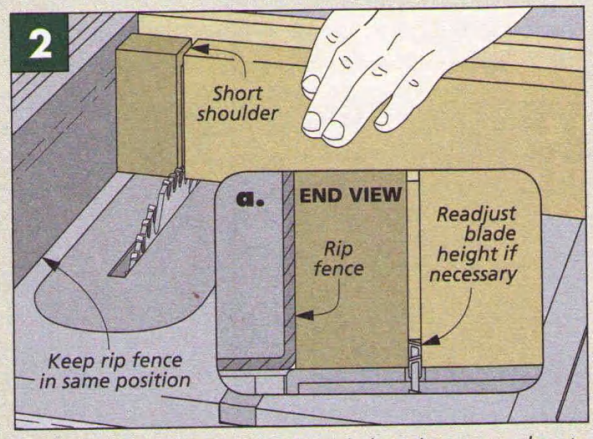

Next, Short Shoulders. *Stand the piece on edge to cut the two short shoulders. To do this, you may need to readjust the height of the blade.*

USING THE JIG

With the shoulders cut, you're ready to put the tenoning jig to work cutting the cheeks and edges. There are many types of tenoning jigs, but the one I like to use, shown at right, has the dual advantage of being simple to build and easy to use. It's essentially a saddle that rides along the rip fence of your saw to carry the workpiece past the blade. A vertical fence holds the piece straight and square. And any adjustment to the cut is as easy as moving the rip fence.

THE CHEEKS CUTS. The cheek cuts come first, then the edge cuts. You start with a simple adjustment of the blade height. Just stand the workpiece beside the blade and let the shoulder cut act as your reference line while raising the blade. You want the blade to cut a hair below the shoulder line.

Next, you'll position the rip fence. This will determine the thickness of the tenon, so getting this adjustment right is pretty important.

As you see in Figure 1, the fence is positioned so that the cut-off waste can fall free and not be trapped between the jig and blade. You'll make one cheek cut and then flip the piece side-for-side in the jig to cut the opposite face.

To position the fence, I clamp a workpiece in place and start by setting it intentionally wide. Then I make a pair of cuts and compare the tenon to the mortise. This shows me how much to move the fence for another trial. I always like to take it slow and gradually sneak up on a good, snug fit.

When the fence setting is dead-on, you can cut all the cheeks — one side, then the other. The jig really does the work. All you have to do is make sure the workpiece is snug to the table and clamped securely. Then push it through the blade.

TOP AND BOTTOM EDGES. The final step is to size the width of the tenon by cutting the top and bottom edges. This is also done with the piece clamped on end in the jig, but turned 90°, as in Figure 2.

Like the cheeks, the waste is cut away to the "outside" of the blade. But first, you'll have to readjust the fence to size the tenon accurately. And here, you can simply test fit the width of the tenon directly to the mortise. Just a little firm pressure should seat the tenon.

So you have two good choices. Either technique will give you great results. And when you need to go the extra mile, the box below offers a few tenon fine-tuning tips. W

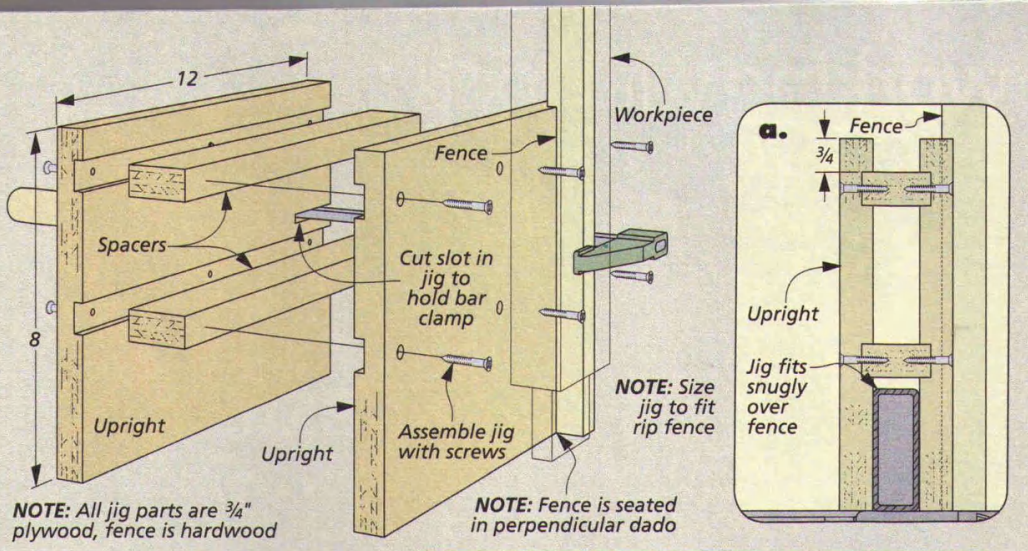

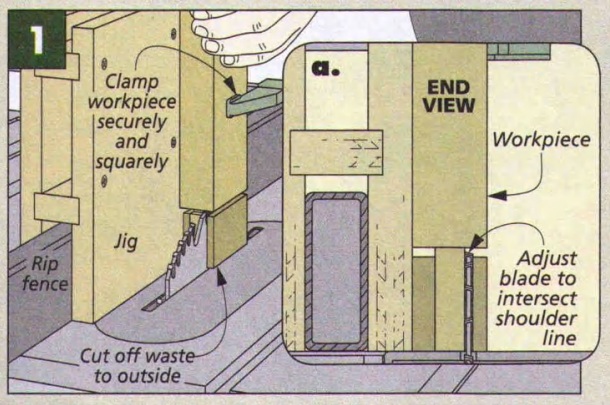

Cheek Cuts. *The workpiece is clamped securely in the jig. Make sure the waste falls to the outside.*

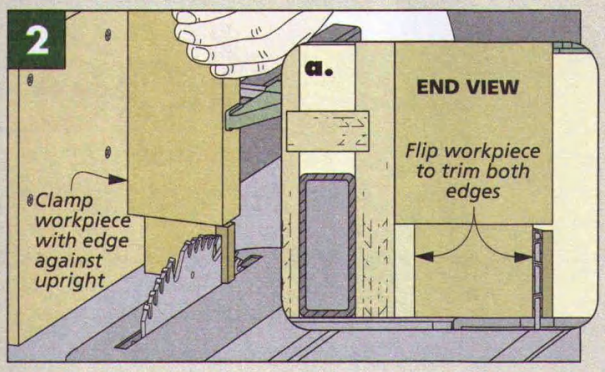

Trim To Width. *Again, with the workpiece in the jig, trim the tenon to width with a cut across each edge.*

How-To: Fine-Tuning the Fit

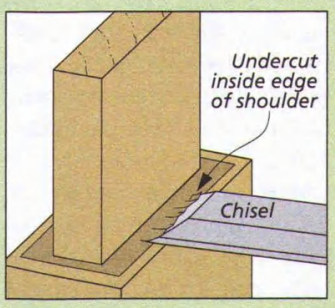

Undercutting. *To ensure a gap-free fit, use a sharp chisel to undercut the shoulders.*

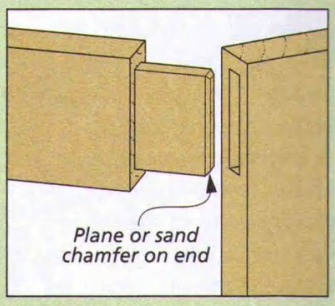

Chamfered Ends. *A short chamfer allows easier assembly and relief space for glue.*

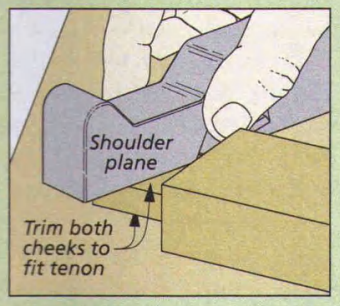

Too Tight. *Correct an overly snug fit with a shoulder plane, a rasp, or sandpaper.*

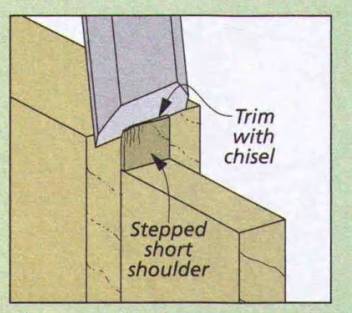

Trim the Shoulder. *A stepped, short shoulder can be easily cured using a sharp chisel.*

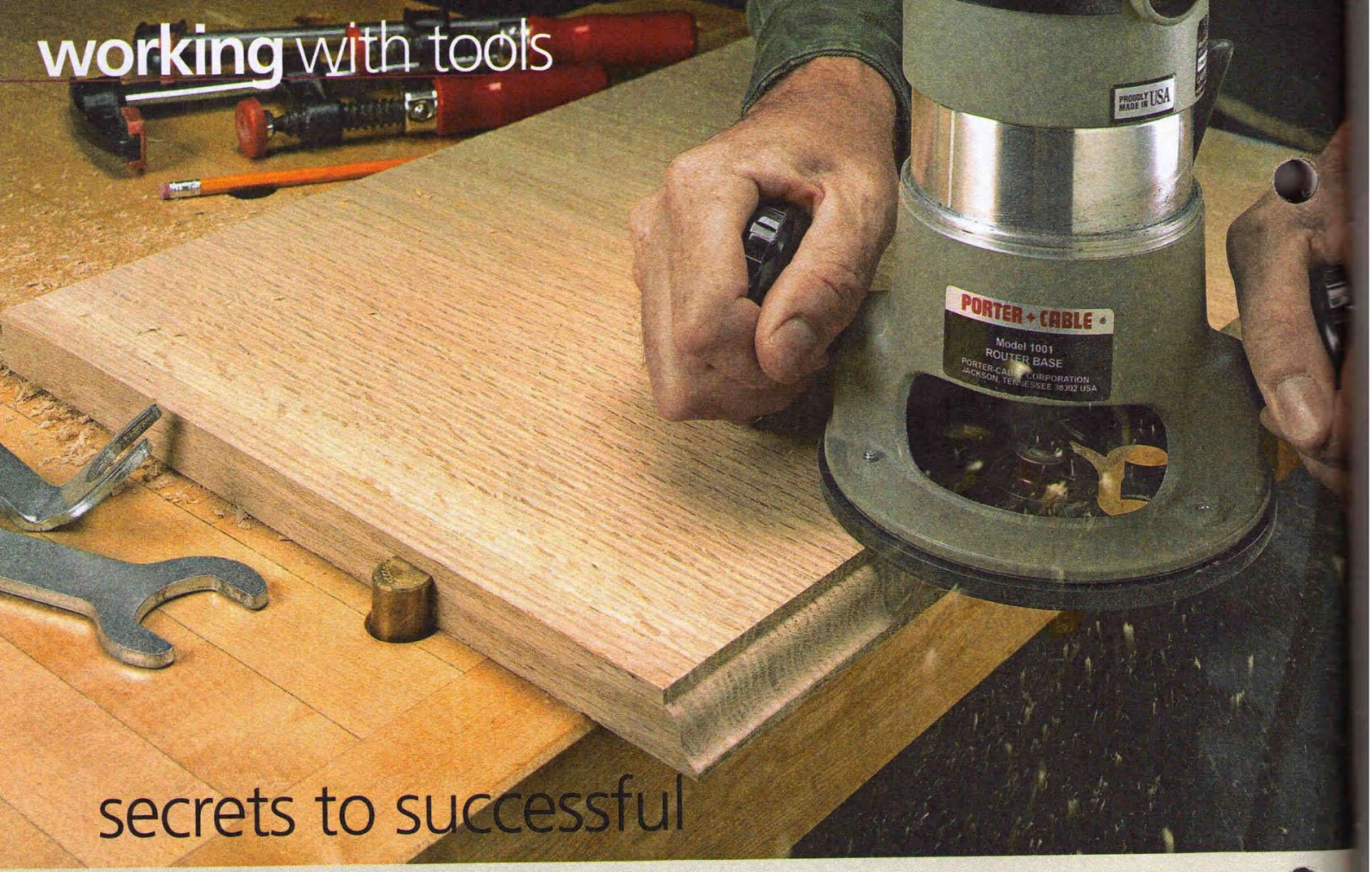

secrets to successful

Edge Routing

A router, some bits, and these simple, shop-tested techniques are all you need to add character and distinction to a woodworking project.

Whenever a project needs a decorative edge, I like to reach for my hand-held router. But there's more to getting a smooth profile than meets the eye. Here are a few tips to help you get perfect results.

▼ Ball bearings on the ends of these bits help guide them while routing an edge.

SECURE THE WORKPIECE. The first step is to make sure the workpiece is firmly secured to your bench. If your bench has bench dogs, set them slightly below the surface of the workpiece and adjust the vise to hold it. But if you don't have dogs, you can set the workpiece on a routing pad or clamp it to your bench. Just make sure the clamps won't interfere with the path of the router.

ROUTER SUPPORT. One of the most difficult things to do when routing an edge is to keep the router flat and level. Since you're literally using less than half of the router base for support, it's easy to tip the router and gouge the edge. Fortunately, there are a couple of ways to prevent this from happening.

One method is to clamp a support board parallel to the edge of the workpiece, as shown in the upper right drawing on the opposite page. You'll need to leave enough space between the pieces so the bit will cut only the workpiece. But the support board should be close enough for the router base to slide on the surface. It will also need to be the same thickness.

Sometimes, as in trimming edging flush, you have to rout a profile while the workpiece is standing on edge. The edge is simply too narrow to balance a router on. You can solve this problem by clamping a block flush with the edge of the workpiece (see lower left drawing on opposite page). That will provide added support to keep the router level.

BEARING BIT. Once the workpiece is secure and the router steady, the next step is to select the right bit. Using bearing-guided router bits really helps control the cut.

To keep the profile uniform, the edge of the workpiece should be

smooth, and the bearing must be in solid contact with the wood. Since the bearing rides on the edge, be careful when routing a deep profile. If you can't leave at least ⅛" of material for the bearing to ride on, it's a good idea to place a scrap piece under the workpiece flush with the edge. Or you may want to clamp a fence to the workpiece to guide the router.

PREVENTING TEAROUT. The direction you feed the router also affects the cut. The rule is to rout from left to right. And that's not usually a problem for long grain.

But there may be occasions when you can't follow that rule, such as routing an edge where the grain runs in all directions. That's when I like to backrout (see box below).

But tearout can get bad when routing end grain, too. The bit is pushing across the grain, and the chips tear away when the router reaches the edge. The solution is to clamp a block alongside the edge (right drawing below). Then the router glides over the end grain onto the block, reducing tearout.

Another solution is to rout the end grain first, then clean up any chipout at the corner when you rout the long grain.

SHALLOW CUTS. One of the most effective ways to get a smooth, consistent profile is to make a series of shallow cuts. By taking smaller "bites," there's less chance of the wood chipping out.

I start by setting the bit so just a little of the cutting edge is exposed. After each pass, I lower the bit a little more until the desired profile is reached. I like to shave off no more than ¼" with each pass.

Routing a decorative profile adds flair and uniqueness to a project, making it stand out. Following these techniques guarantees you can get great results. W

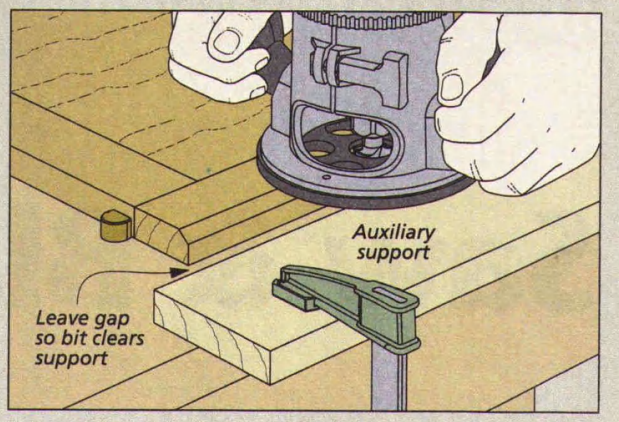

Edge Support. *Clamp a board of equal thickness parallel to the workpiece, with enough space for the bit to clear the auxiliary support.*

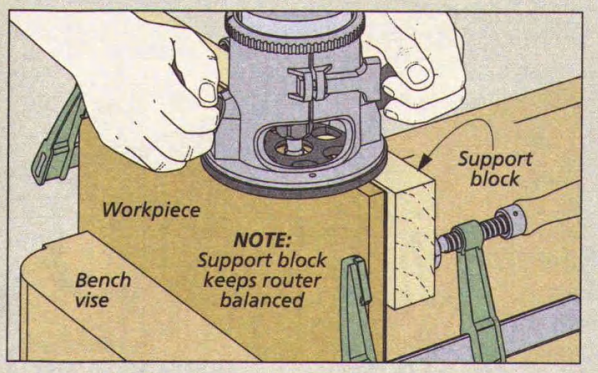

Support Block. *Clamping a block to "widen" the edge will support the router and help prevent tipping, which can result in an uneven cut or gouging.*

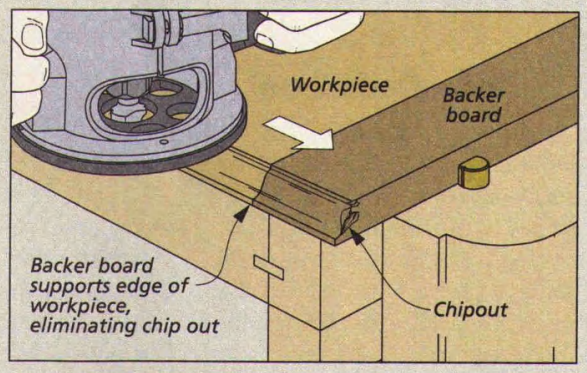

Backer Board. *A good way to prevent tearout along end grain is to clamp a backer board along the exit edge of the workpiece to back up the cut.*

How-To: Prevent Tearout by Backrouting

Sometimes, the best way to reduce tearout is backrouting. Backrouting is feeding the router "backward," or in the opposite direction the bit is rotating. Instead of the bit pushing the wood, it's pulled into the wood. That means the "chips" are being routed away before they have the opportunity to tear out.

The problem with backrouting is that the bit tends to bounce along the edge, pulling the router and making it difficult to control. So, you'll need to take very shallow passes and keep a firm grip on the router. To finish up, make the last routing pass in the normal direction to clean up the edge.

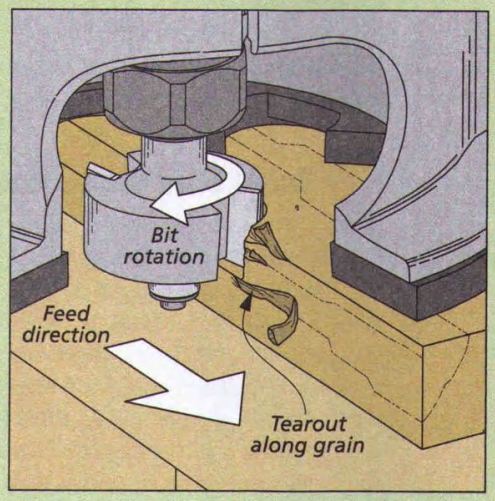

Tearout. *When operating a router in the normal left-to-right direction, the bit pushes the waste ahead of it, leading to chipout.*

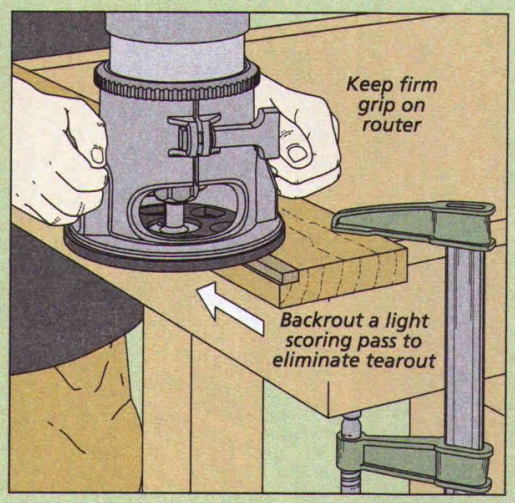

Less Tearout. *In backrouting, the router is fed in the opposite direction, allowing the bit to clean up the edge as it moves along.*

simple ideas for Saw & Blade Storage

Storing saws and blades to keep them both sharp and easily accessible can be a challenge. Here are a few easy-to-make solutions.

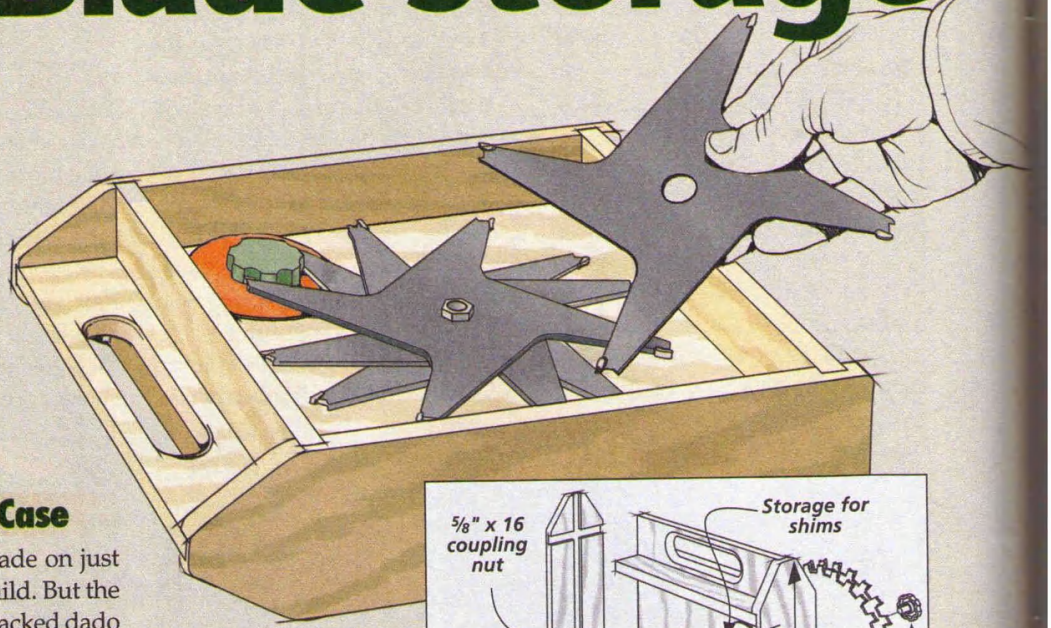

1 Dado Blade Case

I use my dado blade on just about every project I build. But the cardboard box for my stacked dado set has long since fallen apart. So I needed to find a way to store the blades, chippers, and shims that would keep them easily accessible and still protect the carbide tips.

I made the storage case shown at right to hold the scoring blades on one side and the chippers and shims on the other. This way, I don't have to worry about damaging the carbide teeth. The sides help protect the blades when the case is laying flat.

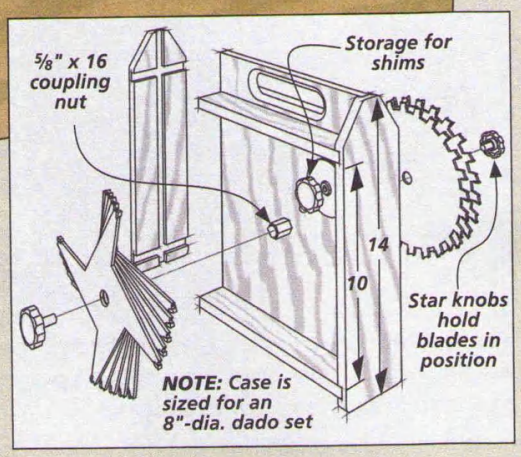

The case is just a ½" plywood box with a coupling nut glued in the center. The nut is sized to fit the arbor hole of the blades. Star knobs screw into the nut and hold the parts on both sides of the case.

I cut a handle in the center panel to make the case easier to carry. You can use a router with a ¼" roundover bit to soften the edges and make the handle more comfortable. I assembled the case with simple dado joinery and added a couple coats of polyurethane for protection.

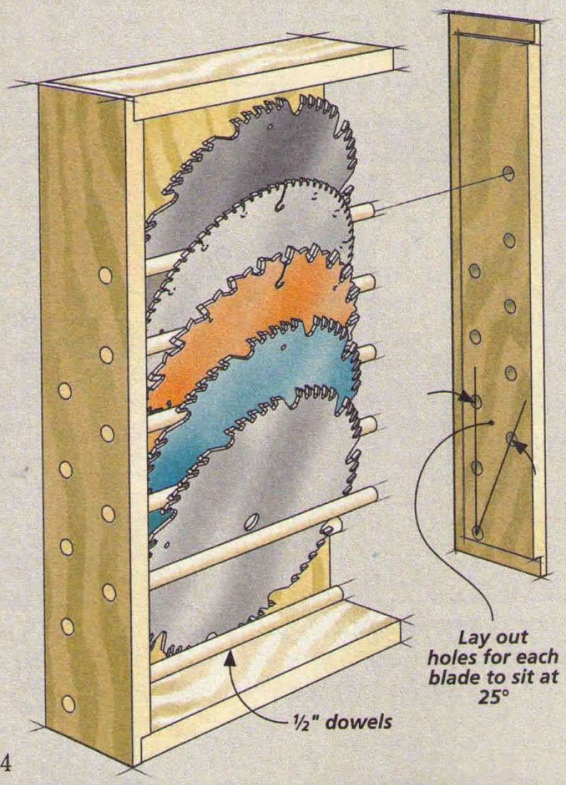

2 Table Saw Blade Rack

When it comes to storing the assorted rip, crosscut, and combination blades used at the table saw, it's important to keep the carbide teeth from knocking together and chipping. You'll also want a method that keeps them within easy reach and makes it easy to identify the blades when you need to use them.

The wall-mounted storage rack shown at left is a simple way of meeting all those requirements. It hangs on a wall near your saw and holds the blades securely between dowel supports, making it easy to spot the one you need.

The rack itself is assembled with rabbet joints and glue. I added a ¼" plywood back to keep the rack stable. The dowels are just glued in place in holes in the sides. You can hang the rack on the wall with screws through the back.

3 Scroll Saw Blade Storage Tube

If you do much work with a scroll saw, you know how often blades break and need to be replaced. This convenient way of storing them keeps them close at hand and will save you from getting up every time you need a new blade. It's just a short piece of PVC cut to the length of the blades. I cemented a cap on one end and left the cap loose on the other. Coloring the removable cap makes it easy to remember which end to open.

To hold the storage tube, I attached a couple of spring clips (the kind used for holding a broom on a wall) to the saw base with sheet metal screws. The blade holder pops right into the clips.

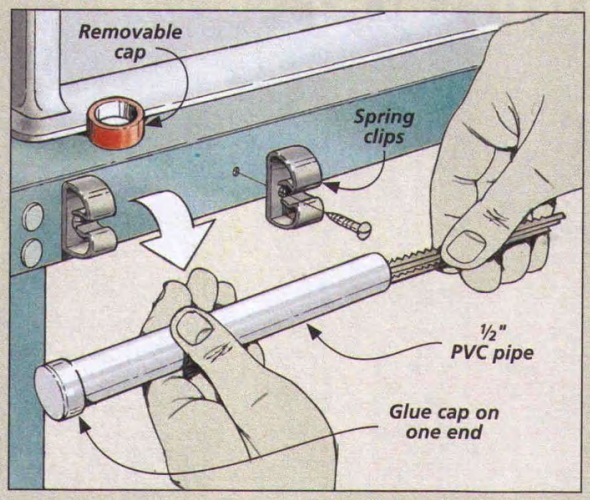

4 Hand Saw Rack

I use hand saws for many of my shop projects. But finding a way to store them near my workbench has always been a problem.

I liked the idea of hanging the saws close to my work area, but didn't want to drill a hole in the blade or handle for a hanger. The other concern was how to devise a way to hang the saws that didn't dull the teeth or damage the set (the alternating outward bend of each tooth).

The hanging storage rack shown at right keeps the saws within easy reach while protecting the blades. It's simple to build and only requires a few scrap pieces of wood, hardboard, and dowel.

As you can see in the drawing at left, the hanger is just a series of beveled blocks sandwiched between two hardboard faces. Loose dowels fit between each beveled block and act as cams to pinch the saw blades and hold them in place.

To remove a saw, simply lift the handle and slide the blade out of the notch. You can mount the hanger to a shop wall with just a couple of screws.

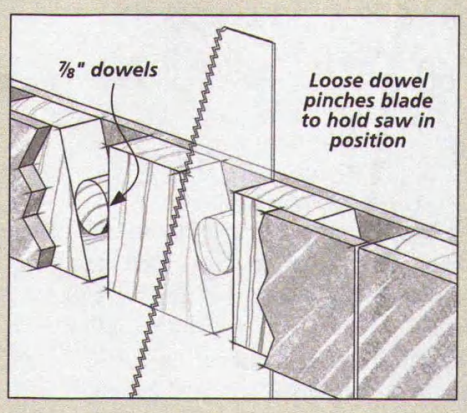

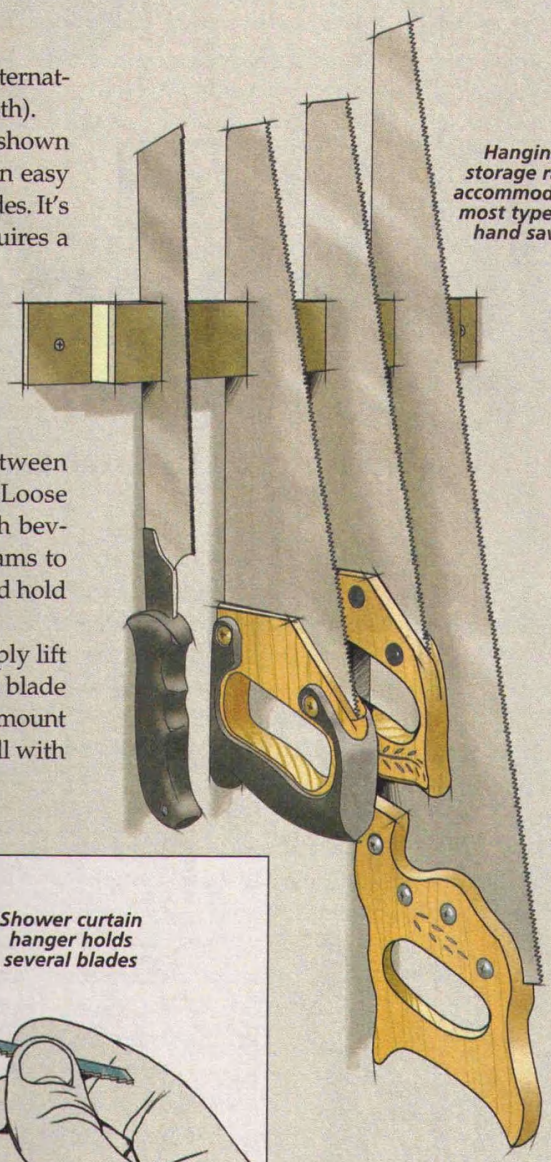

5 Jig Saw Blade Ring

For years, it seemed like every time I needed a jig saw blade I had to open a new pack. That's because the loose blades had a way of disappearing to the bottom of the drawer, never to be seen again.

I solved the problem by using a shower curtain hanger as a "key ring" for my spare blades. It's just the right size to fit the holes in most jig saw blades. Now, with the blades all in one place, I never have to search the bottom of the drawer to find the one I'm looking for. W

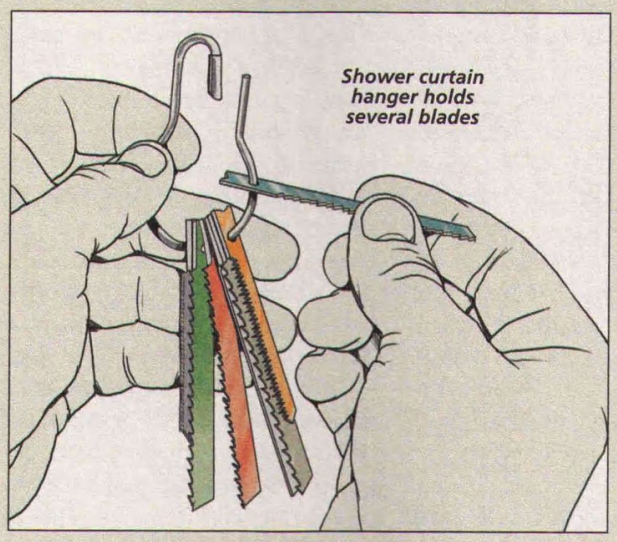

choosing a Workbench Finish

Building a workbench is a considerable investment in time and money. So you'll want to make sure to choose the right finish for the job.

Selecting the proper finish for a project is always a challenge. And finishing a workbench is no exception. You might think that because a workbench spends its life in the shop rather than the living room, the type of finish you use doesn't really matter all that much.

The truth is, the finish you put on your workbench is just as important as how tall to make the bench, what kind of vises to install, and whether or not to include a tool tray.

GOALS. But when you get right down to it, you're really only looking for three things in a workbench finish. First, you want something that will protect the bench. You also want a finish that looks good, not only when you first apply it, but also down the road. And finally, since most workbenches get a lot of abuse, you want a finish that is easy to repair if it gets damaged. With these objectives in mind, here's a look at a few different types of finishes commonly used on workbenches.

▼ A wiping varnish will offer maximum protection for your bench, but will require more maintenance.

FILM FINISHES. At first thought, it may seem that a traditional, built-up film finish, like a varnish or lacquer, would offer the best protection for a workbench. And in many respects, this is true.

A film finish will offer the greatest resistance to drips and spills, as well as provide a protective surface against minor dings and abrasions. And a film finish definitely looks nice, which is a plus, especially if you're building a "showpiece" workbench.

But there are a couple of downsides to film finishes. For one, most of them tend to dry fairly hard and smooth. So they can make the top of your bench a bit slick. This in turn can make it difficult to hold pieces securely on your bench while working on them.

Even more important, however, is the fact that a film finish can be difficult to maintain. Sooner or later, your bench is going to get cut, nicked, dented, or scratched. And when that happens, your only options are to live with the damage, or sand down the benchtop and refinish it.

There is one case where a film finish is fine though. And that's when it comes to the base of the bench. Since this part of the bench won't get subjected to the same kind of abuse as the top, a film finish makes sense here.

OIL FINISH. One of the oldest and easiest ways to finish a workbench is to simply wipe on several coats of either boiled linseed oil or tung oil. This type of finish has the benefit of being inexpensive and extremely easy to apply.

All you do is brush on a heavy coat of oil, let it soak in for several minutes, and then wipe off the excess. Unlike a film finish, the oil soaks into the pores of the wood, rather than sitting on top of the surface. The oil creates a barrier against any spills that may occur while you're using the bench.

But the biggest advantage of an oil finish is that it's easy to rejuvenate. All you have to do is add another coat of oil periodically to keep the top looking good. You may want to give the top a light scraping or sanding to remove any dirt or grime before applying the oil, but even that isn't absolutely necessary.

But like the film finishes, oil finishes have their drawbacks as well. For one thing, oil finishes take a long time to dry. If you use boiled linseed oil, you may have to wait several days for your benchtop to dry. And the linseed oil leaves behind an odor that some people don't really care for.

More importantly, oil finishes don't offer much protection to the surface of the bench. Although they resist spills, they don't offer much protection against dirt or abrasion. In fact, the thing that I don't like about oil finishes is that they leave a bench looking and feeling like it doesn't have any finish at all on it.

OIL & BEESWAX FINISH. There's another "traditional" type of workbench finish that's almost as easy as an oil finish to apply, but offers a bit more protection. And that's an oil and beeswax mixture.

In many ways, this finish gives you the best of all options. It offers a reasonable amount of protection, and since it's easy to renew, it will keep your bench looking great too. That's why it's my first choice for a workbench finish. (And it's not just for workbenches — it works great on furniture projects as well.)

You can easily make your own oil and beeswax finish. The recipe consists of nothing more than equal amounts of beeswax, turpentine, and boiled linseed oil. The box below outlines the steps involved.

The finish is applied in the same manner as an oil finish. On a brand new bench, you'll have to apply two or three coats so that it seals the wood. Once it dries, you can buff the wax with a soft cloth. After that, you can simply apply a rejuvenating coat whenever necessary.

The oil seals the wood against spills and the beeswax prevents glue squeezeout from sticking to the bench. Plus, it adds an extra level of protection against dirt and minor abrasions that you don't get with a straight oil finish. And again, like an oil finish, you can touch up any damaged areas without having to refinish the entire top.

AU NATURAL. Finally, there's one other option that's worth a passing mention, and that is to skip the finishing altogether. Granted, this sounds a bit odd at first. But if your bench is going to be used for rough work, or in a garage or barn where a finish won't last very long anyway, there's not much point in putting in a lot of effort applying a finish. Over time, the wood will age in color and develop its own patina. And you won't ever have to worry about refinishing.

When it comes to choosing a workbench finish, clearly there's no single right answer. But armed with the proper information, you can choose the type of finish that works for you. W

You can make your own finish by combining equal amounts of beeswax, turpentine, and boiled linseed oil.

How-To: Make an Oil & Beeswax Finish

Start with Beeswax. *To make your own finish, start by shaving some beeswax and placing the shavings in a glass jar.*

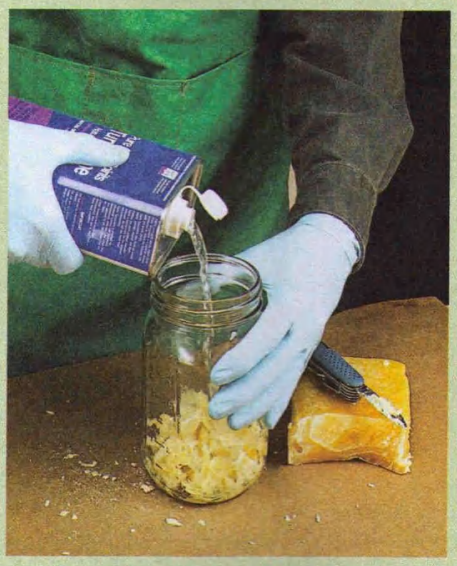

Add Turpentine. *Next, add an equivalent amount of turpentine and let the jar sit overnight or until the beeswax dissolves.*

Add Linseed Oil. *Once the wax is dissolved, you can add the boiled linseed oil. The finish is now ready to use.*

haunched Mortise & Tenon

This variation of the mortise and tenon joint is the perfect choice for traditional frame and panel doors.

When it comes to building strong frame and panel doors for a cabinet or other piece of furniture, you have several joinery choices. Often, I'll use stub tenon and groove joinery. It's simple, quick, and results in a fairly strong door.

But if I'm building a traditional piece of furniture with frame and panel doors that feature solid-wood panels, there's another joint that I prefer to use, and that's the haunched mortise and tenon. And here's why.

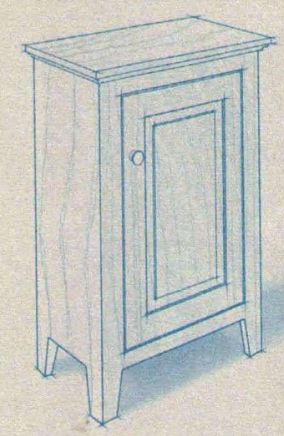

▲ Haunched mortise and tenon joints are a good choice for solid-wood frame and panel doors.

PLYWOOD PANELS. If you're building a door with a plywood panel, you don't have to worry about expansion and contraction of the panel inside the door frame, so you can glue the panel into the frame. The glued-in panel adds strength to the door. In this case, a stub tenon and groove joint is plenty strong, because once the panel is glued into the frame, you end up with a single, rigid assembly.

SOLID-WOOD PANELS. On the other hand, a solid-wood panel shouldn't be glued into its frame because it needs to have the freedom to expand and contract with seasonal changes in humidity. Since the panel merely "floats" in the frame, all the strength for the door has to come from the joinery used to build the frame.

Now, in terms of strength, it's hard to beat a mortise and tenon joint. The haunched mortise and tenon is simply a variation on that joint. It has all the strength of a traditional mortise and tenon joint, along with an added bonus.

The advantage is the "haunch" or short stepped shoulder on one edge of the tenon. As the door rails and stiles are assembled, the haunch fills in the end of the groove that holds the door panel, as you can see in the drawing above.

This haunch allows you to cut the grooves along the entire length of the rails and stiles, instead of having to make stopped grooves or glue plugs into the open ends of the groove. In addition, it provides more lateral stiffness to the construction of the door.

MAKING THE JOINT

If you take a look at the box on the opposite page you'll see that the process for making a haunched mortise and tenon joint is a lot like making a traditional mortise and tenon. There's just one extra step to add and that's making the centered groove for the door panel. I like to cut these grooves in the

frame pieces as the first step. The reason for this is that the walls of the groove will help you gauge the width and location of the mortise.

MORTISE FIRST. There's nothing out of the ordinary when it comes to the mortise. I simply drill out the waste using a Forstner bit on my drill press. The nice thing here is you can use the groove in one of the door frame pieces to help position the fence on your drill press.

After drilling the holes, you can square up the mortise with a chisel. Here again, the side walls of the groove help guide the chisel and keep it straight and square.

NEXT, THE TENON. Once the mortise is complete, you can cut the tenon to match. And I think you'll find that the groove will come in handy in the setup, as well.

Simply lay one of the door frame pieces on the table saw and adjust the height of the dado blade so the tips of the teeth are flush with the lower edge of the groove. Then you can cut both faces of the tenon by making multiple cuts with the dado blade, as shown below. (For a more detailed discussing on cutting tenons on a table saw, see the article on page 38.)

MAKING THE HAUNCH. After cutting the tenon cheeks, you'll cut away the waste on the edge of the tenon. And here's where the haunch comes into play. To create the haunch, you simply leave the shoulder a little longer by not trimming the waste all the way back.

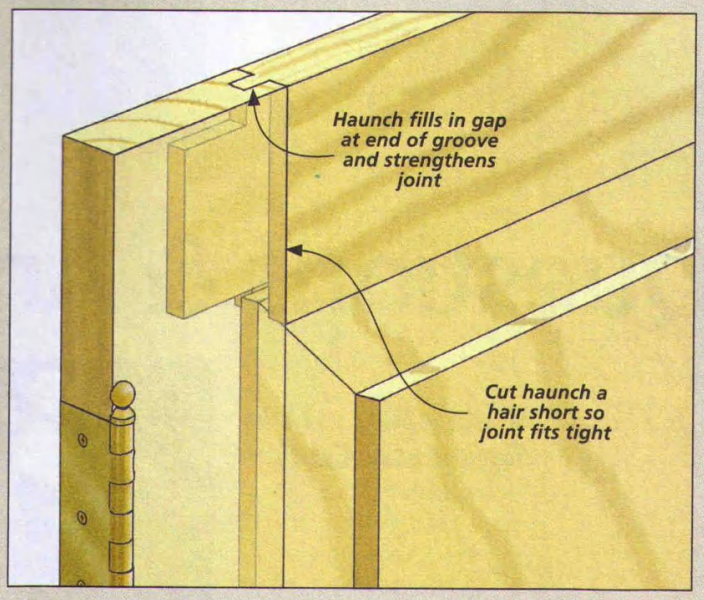

There's just one other thing to note here. Ideally, the length of the haunch should match the depth of the groove. But I like to cut the haunch just a hair short. (I'm only talking about 1/64" or so.)

The reason for this is simply to prevent the haunch from bottoming out in the groove before the long shoulders of the tenon seat against the edges of the mortised piece, as shown in the drawing above. This ensures a tight-fitting jointline where the pieces meet.

While it may seem like a small detail, haunched mortise and tenon joints are one of those things that make the difference between run-of-the-mill construction and a special project that really stands out. And the best part is they aren't really difficult to make.

How-To: Make a Haunched Mortise & Tenon

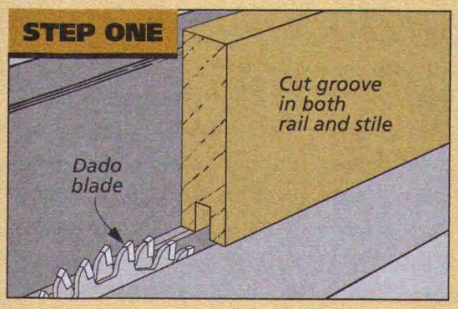

Cut Grooves. *With a dado blade on your saw, cut a centered groove along the edge of each frame piece to hold the panel.*

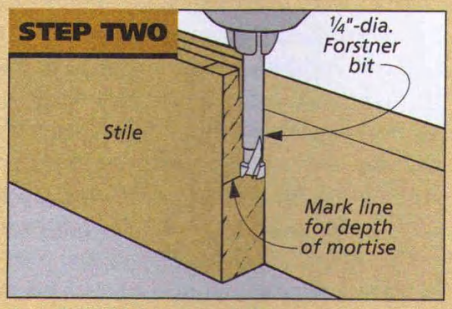

Set Drill Bit Depth. *Adjust the depth stop on your drill press to regulate the depth of the mortise. Then drill out the waste.*

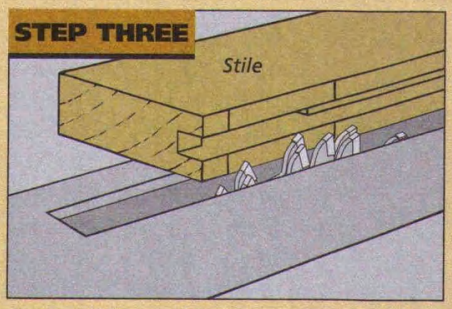

Set Saw Blade Height. *Using the shoulder of the groove as a guide, raise the saw blade to cut the tenon shoulders.*

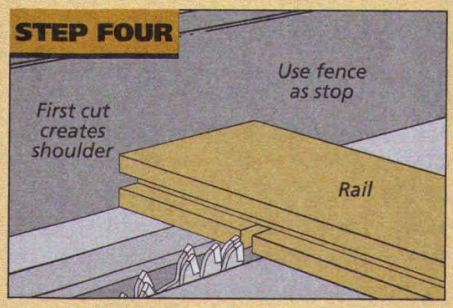

Establish Shoulder. *Now cut the shoulder on one side of the tenon first, using the rip fence as a stop.*

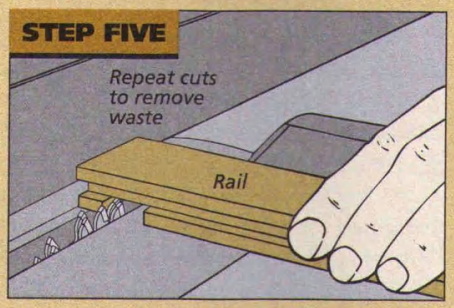

Remove Waste. *Remove the rest of the waste by making multiple passes. Then repeat the process for the other cheek.*

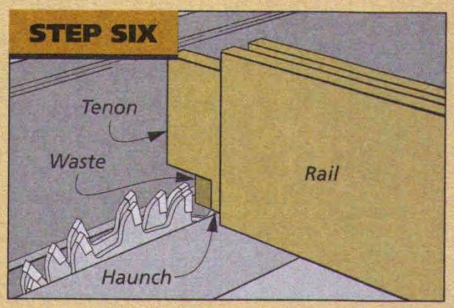

Create Haunch. *Trim the waste on the edge of the tenon, leaving a haunch that will fill in the groove on the mating piece.*

Questions & Answers

Working with Spanish Cedar

Q ***I'm making a cigar box from Spanish cedar and need some information. Do the oils in the wood make it difficult to glue? Will glue hinder the enhancement and aging process of the cigars? Can I use oil and wax on the outside of the box to finish the wood?***

Jack Babtels
Harlingen, Texas

A Spanish cedar, which isn't a cedar, but a deciduous tree (it loses its leaves) in the mahogany family, has a lot of natural oils. These oils are what give the wood its wonderful aroma, but they can also prevent most finishes from properly adhering to your project.

GLUING CEDAR. For best results when gluing Spanish cedar, I wipe the area to be glued with acetone, a fast drying solvent. It removes the resin and oil, allowing the glue to adhere.

Once you've removed the oils on the surface, you can use any type of glue. I usually use yellow glue because it provides a strong bond and doesn't leave behind any odors. Once dry, most glues no longer carry an odor. So the glue you choose won't interfere with the cigars' aging process.

FINISHING. Spanish cedar, a dark reddish-brown wood, will age well without any finish. But if you decide to finish the outside of the box, the best choice is tung oil or boiled linseed oil. Both will mix well with the natural oils in the wood and give the finished piece a warm, aged look. Eventually, the wood will darken more.

I wouldn't recommend a finish that seals the wood, such as polyurethane, because it will seal in the fragrance of the wood.

After you've used your cigar box for a few years, you may notice that the fragrance of the wood isn't as strong. If this happens, you can lightly sand the wood with 400-grit sandpaper to restore the fragrance.

HARDWARE. There are a few other things about this wood you'll want to consider as you make the cigar box. The oils in the wood will stain some metals. So, the best choice for hardware on the box is lacquer-coated brass or stainless steel. These metals will not be affected by the oils in the wood.

CLEANING. Depending on the amount of oil in the wood, oil and resin may continue to seep out for some time after finishing your cigar box. If this becomes a problem, simply remove the cigars and wipe the interior of the box with acetone. After the acetone has had a few minutes to evaporate, you can return the cigars to the box. W

Do you have any questions for us?

If you have a question related to woodworking techniques, tools, finishing, hardware, or accessories, we'd like to hear from you.

Just write down your question and mail it to us: Woodsmith Q&A, 2200 Grand Avenue, Des Moines, Iowa 50312. Or you can email the question to: woodsmith@woodsmith.com.

Please include your full name, address, and daytime telephone number in case we have questions.

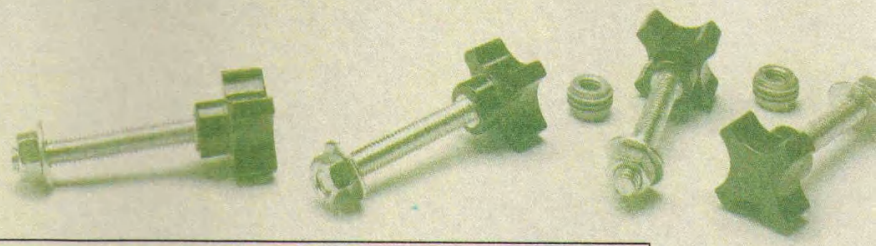

Sources

BROOMS AND BRUSHES

Cleaning up around the shop will be easier with a brush and broom from the article on page 8. All the brooms were purchased from *McMaster-Carr*, including the horsehair broom (7167T4), the tampico/horsehair/polypropylene broom (7168T4), the multi-surface push broom (7736T11), and the angle broom (7634T22).

Most of the bench brushes were purchased at *Garrett Wade*, including the large flare tip brush (95K03.01), the small, round detail brush (95K03.01), and the goat hair brush (53G06.02). The standard bench brush is available at the *Woodsmith Store*.

SANDERS

The sanders featured in the article on page 10 can help you get a tedious job done faster and easier. They're available from most hardware stores and home centers. On-line retailers also offer a wide selection. For the sanding insert baseplate that fits the *Porter-Cable* oscillating spindle sander, you'll need to contact *Woodhaven* (147PCS).

The sandpaper alternatives featured on page 12 may be a good choice for your projects. The *Abranet* discs (147492) and replacement pad (147512) are available from *Woodcraft*. You can get the *Microplane* discs (23704) and the non-woven sanding pads (39397) from *Rockler* or sources listed in the margin at right.

DESIGN/INLAY KIT

Just as we were going to press, *Milescraft* announced that the *Design/Inlay Kit* featured on page 14 had been upgraded. It now includes two more template wheels (including heart, star, circle, and bow tie patterns), additional collars, as well as carbide spiral and V-groove bits.

The good news is, all the items shown in the article are still included and the price will remain the same. The new product is model 1207, the *Design/Inlay Kit*. The kit will be available from *Rockler* or *Amazon.com*.

CANDLE CENTERPIECE

The candle centerpiece on page 16 will give you the chance to use small, prized pieces of figured or exotic wood and show off your joinery skills too. The glass candleholders and votive candles were purchased at *Michaels*, a nationwide craft store chain.

WORKBENCH

Most of the hardware for the workbench project that begins on page 20 can be found at a local hardware store or home center. The vises were purchased from *Lee Valley*. The large front vise (70G08.02) and handle (05G12.03) are sold separately. The tail vise screw (70G01.51) is actually meant for use on a shoulder vise and is listed this way. You'll also need to order a handle for the tail vise. *Lee Valley* sells the bench dogs (05G04.02) in pairs. The front vise and bench dogs are also available at the *Woodsmith Store*.

FRETWORK WALL SHELF

There are just two pieces of hardware you'll need for the scroll saw shelf on page 34. The keyhole hangers that hold the shelf were purchased from *Rockler* (28837). Brads to hold the fretwork in place are available at local hardware stores and home centers. We ordered the beveled mirror at a local glass shop. W

Online Customer Service

Click on *Magazine Customer Service* at ***www.woodsmith.com***

- Renew your subscription
- Renew your GIFT subscriptions
- Pay your bill
- Pay a GIFT invoice
- Change your mailing address
- Change your e-mail address
- View your account information or gift subscriptions

MAIL ORDER SOURCES

Project supplies may be ordered from the following companies:

Woodsmith Store
800-444-7527
Bench Brush, Bench Dogs, Large Front Vise

Amazon
amazon.com
Design/Inlay Kit

Eagle America
800-872-2511
eagleamerica.com
Abranet Discs and Pads, Design/Inlay Kit, Microplane discs

Garret Wade
800-221-2942
garrettwade.com
Bench Brushes

Lee Valley
800-871-8158
leevalley.com
Bench Dogs, Large Front Vise, Vise Handle, Shoulder Vise Screw

McMaster-Carr
630-600-3600
mcmaster.com
Brooms

Michaels
michaels.com
Candleholders, Votive Candles

Rockler
800-279-4441
rockler.com
Design/Inlay Kit, Keyhole Hanger, Microplane discs, Non-woven sanding pads

Woodcraft
800-225-1153
www.woodcraft.com
Abranet Discs and Pads

Woodhaven
800-344-6657
woodhaven.com
Spindle Sander Baseplate

Woodsmith®

HARDBOUND VOLUMES

This set includes six hardbound volumes of ***Woodsmith*** *(Volumes 22 through 27). Each volume includes a year of issues, plus a table of contents and a handy index.*
Buy them for $29.95 each. Or get the whole six-volume set for $139.50 and ***SAVE $40***
— that's like getting one volume FREE.
(Offer expires 12/31/07)

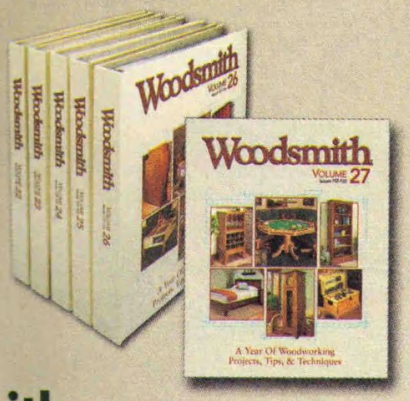

Go to www.Woodsmith.com
or Call 1-800-444-7527 Today to Order Yours!

looking inside

Final Details

▲ *Fretwork Wall Shelf.* Don't be fooled into thinking this shelf is difficult to build. You use one "master" scroll saw pattern to cut all the fretwork that gives the project its unique look. Check out the details on page 34.

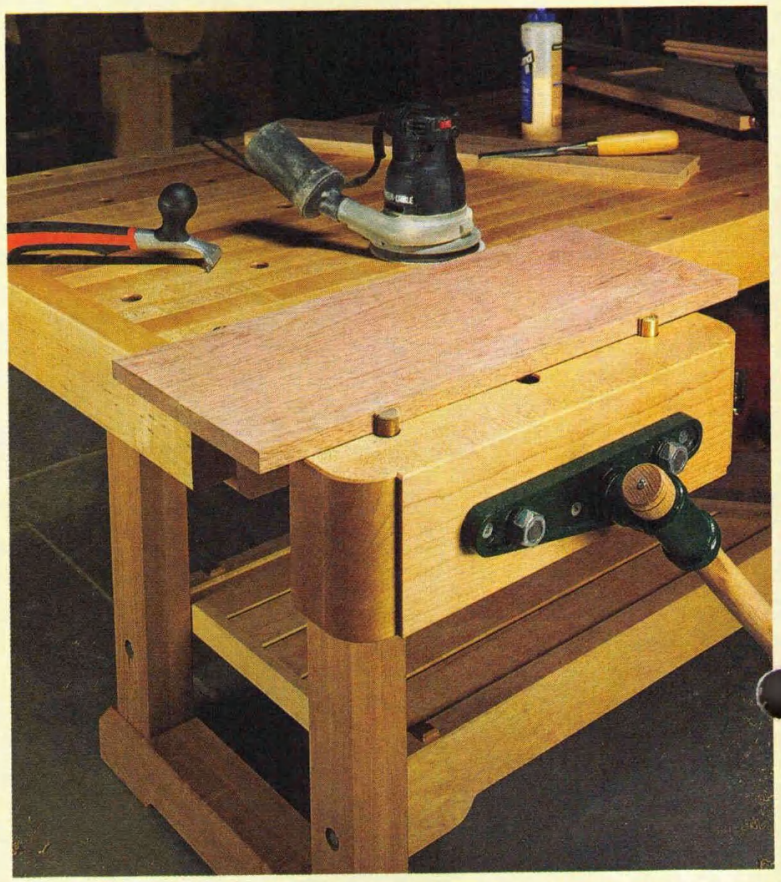

▲ *Traditional Workbench.* If you've always wanted to build a classic workbench, this is the one. It features rock-solid construction, two heavy-duty vises, and enough workspace to handle any project with ease. The plans on page 20 will guide you through it.

◄ *Candle Centerpiece.* Sometimes you just can't beat simplicity in a project design. This candle centerpiece proves the point. Take a small amount of wood, add some simple joinery, top it off with perfect detail and the result is a truly eye-catching accent piece. You'll find everything you need to get started on page 16.